CITY OF PLYMOUTH

HENNEPIN COUNTY, MINNESOTA

CONSTRUCTION PLANS FOR :

GRADING, AGGREGATE BASE, BITUMINOUS PAVING, BITUMINOUS TRAIL, CONCRETE SIDEWALK, CONCRETE CURB & GUTTER, DRAINAGE, TURF ESTABLISHMENT, AND RETAINING WALLS.

KILMER PARK STREET RECONSTRUCTION

CITY PROJECT NO. ST189001.001

PLAN SYMBOLS

STATE LINE
COUNTY LINE
TOWNSHIP OR RANGE LINE
SECTION LINE
QUARTER LINE
SIXTEENTH LINE
RIGHT–OF–WAY LINE
PRESENT RIGHT–OF–WAY LINE
CONTROL OF ACCESS LINE
PROPERTY LINE (Except Land Lines)
VACATED PLATTED PROPERTY
CORPORATE OR CITY LIMITS
TRUNK HIGHWAY CENTER LINE (P.I. 45 S1 P.I. 47 S1)
RETAINING WALL
RAILROAD
RAILROAD RIGHT–OF–WAY LINE
RIVER OR CREEK (NAME)
DRY RUN
DRAINAGE DITCH (SIZE)
DRAIN TILE (DT)
CULVERT
DROP INLET
GUARD RAIL
BARBED WIRE FENCE
WOVEN WIRE FENCE
CHAIN LINK FENCE
RAILROAD SNOW FENCE
STONE WALL OR FENCE
HEDGE
RAILROAD CROSSING SIGN
RAILROAD CROSSING BELL
ELECTRIC WARNING SIGN
CROSSING GATE
MEANDER CORNER
SPRINGS
MARSH
TIMBER / ORCHARD / BRUSH / NURSERY (TIMBER)
CATCH BASIN
FIRE HYDRANT
GATE VALVE
SANITARY SEWER MANHOLE
STORM SEWER MANHOLE
OVERPASS (Highway Over)
UNDERPASS (Highway Under)
BRIDGE
BUILDING (One Story Frame) 1-S-F 75'
F–FRAME C–CONCRETE
S–STONE T–TILE
B–BRICK ST–STUCCO
IRON PIPE OR ROD
MONUMENT (STONE, CONCRETE, OR METAL)
WOODEN HUB
GRAVEL PIT
ROCK QUARRY
MAILBOX
SIGN

UTILITY SYMBOLS

POWER POLE LINE
TELEPHONE OR TELEGRAPH POLE LINE
JOINT TELEPHONE AND POWER
ON POWER POLES
ON TELEPHONE POLES
POWER POLE
ANCHOR
STEEL TOWER
STREET LIGHT
PEDESTAL (TELEPHONE CABLE TERMINAL)
GAS MAIN (GAS)
WATER MAIN (W)
CONDUIT
TELEPHONE CABLE IN CONDUIT (T)
ELECTRIC CABLE IN CONDUIT (P)
TELEPHONE MANHOLE (T)
ELECTRIC MANHOLE (P)
BURIED TELEPHONE CABLE (T–BUR)
BURIED ELECTRIC CABLE (P–BUR)
BURIED TELEVISION CABLE (TV–BUR)
BURIED FIBER OPTIC (FIBER OPTIC)
SEWER, (SANITARY)
SEWER, (STORM)
SEWER MANHOLE

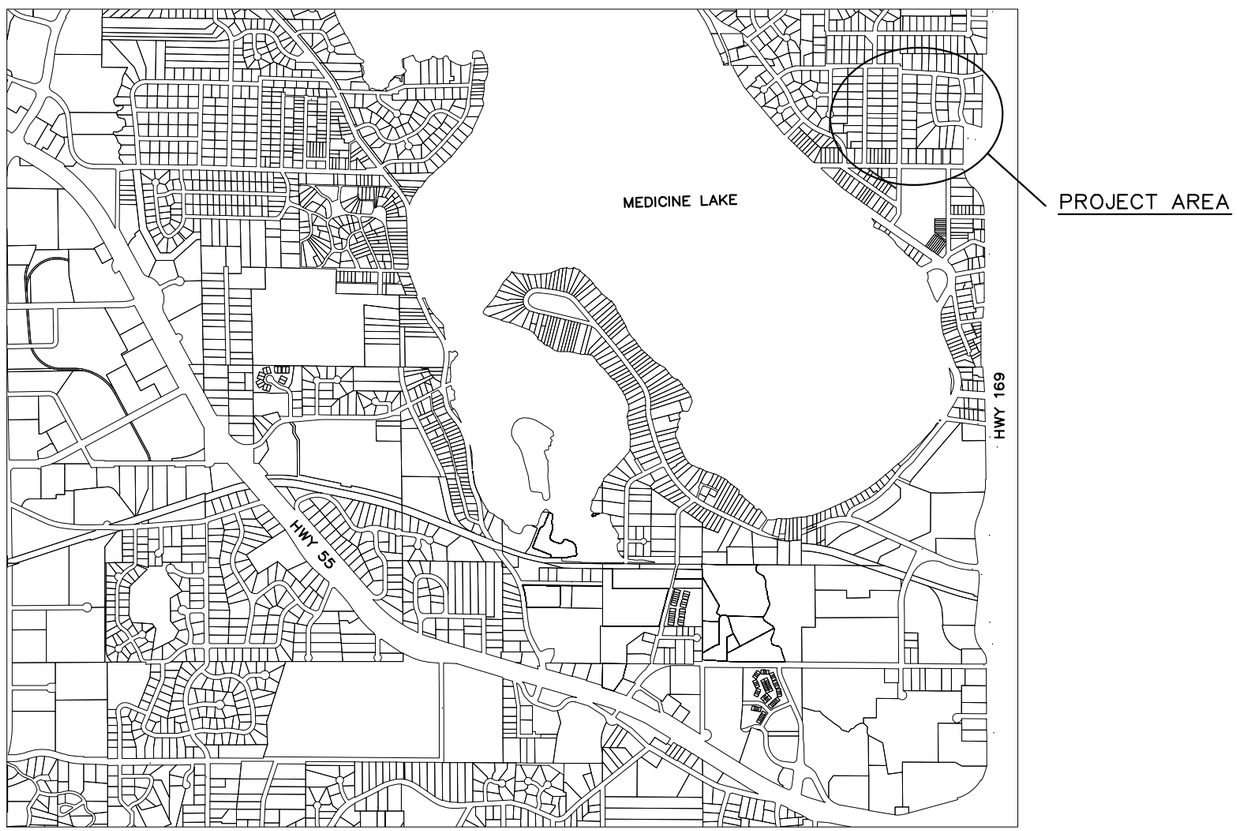

THE SUBSURFACE UTILITY INFORMATION IN THIS PLAN IS UTILITY LEVEL QUALITY D. THIS QUALITY LEVEL WAS DETERMINED ACCORDING TO THE GUIDELINES OF CI/ASCE 38–02, ENTITLED "STANDARD GUIDELINES FOR THE COLLECTION AND DEPICTION OF EXISTING SUBSURFACE UTILITY DATA."

GOPHER STATE ONE CALL: (651) 454–0002

SCALES :

PLAN		50'
	(PLAN)	30'
PROFILE	HORIZ.	50'
(X PROFILE)	HORIZ.	30'
	VERT.	5'
X–SECTIONS	HORIZ.	10'
	VERT.	5'

GOVERNING SPECIFICATIONS:

THE 2018 EDITION OF THE MINNESOTA DEPARTMENT OF TRANSPORTATION THE MOST CURRENT, "STANDARD SPECIFICATIONS FOR CONSTRUCTION" THE MOST CURRENT CITY OF PLYMOUTH,"ENGINEERING GUIDELINES", AND THE CONTRACT DOCUMENTS, INCLUDING THE SPECIAL PROVISIONS, SHALL GOVERN. ALL APPLICABLE FEDERAL, STATE AND LOCAL LAWS AND ORDINANCES SHALL BE COMPLIED WITH IN THE CONSTRUCTION OF THIS PROJECT.

NOTE:

THE EXACT LOCATION OF UNDERGROUND UTILITIES SUCH AS GAS, TELEPHONE, WATER, ETC. ARE UNKNOWN. THE CONTRACTOR SHALL CONTACT THE APPROPRIATE UTILITIES BEFORE COMMENCING EXCAVATION.

INDEX:

THIS PLAN SET CONTAINS 106 SHEETS

I HEREBY CERTIFY THAT THIS PLAN WAS PREPARED BY ME OR UNDER MY DIRECT SUPERVISION AND THAT I AM A DULY LICENSED PROFESSIONAL ENGINEER UNDER THE LAWS OF THE STATE OF MINNESOTA.

ENGR. _____
MICHAEL J. PAYNE, P.E., ASSISTANT CITY ENGINEER

Reg. No. 50484 Date 3–13–18

City of Plymouth

STATE AID PROJECT NO. ----

CITY PROJECT NO. ST189001.001

SHEET 1 OF 106

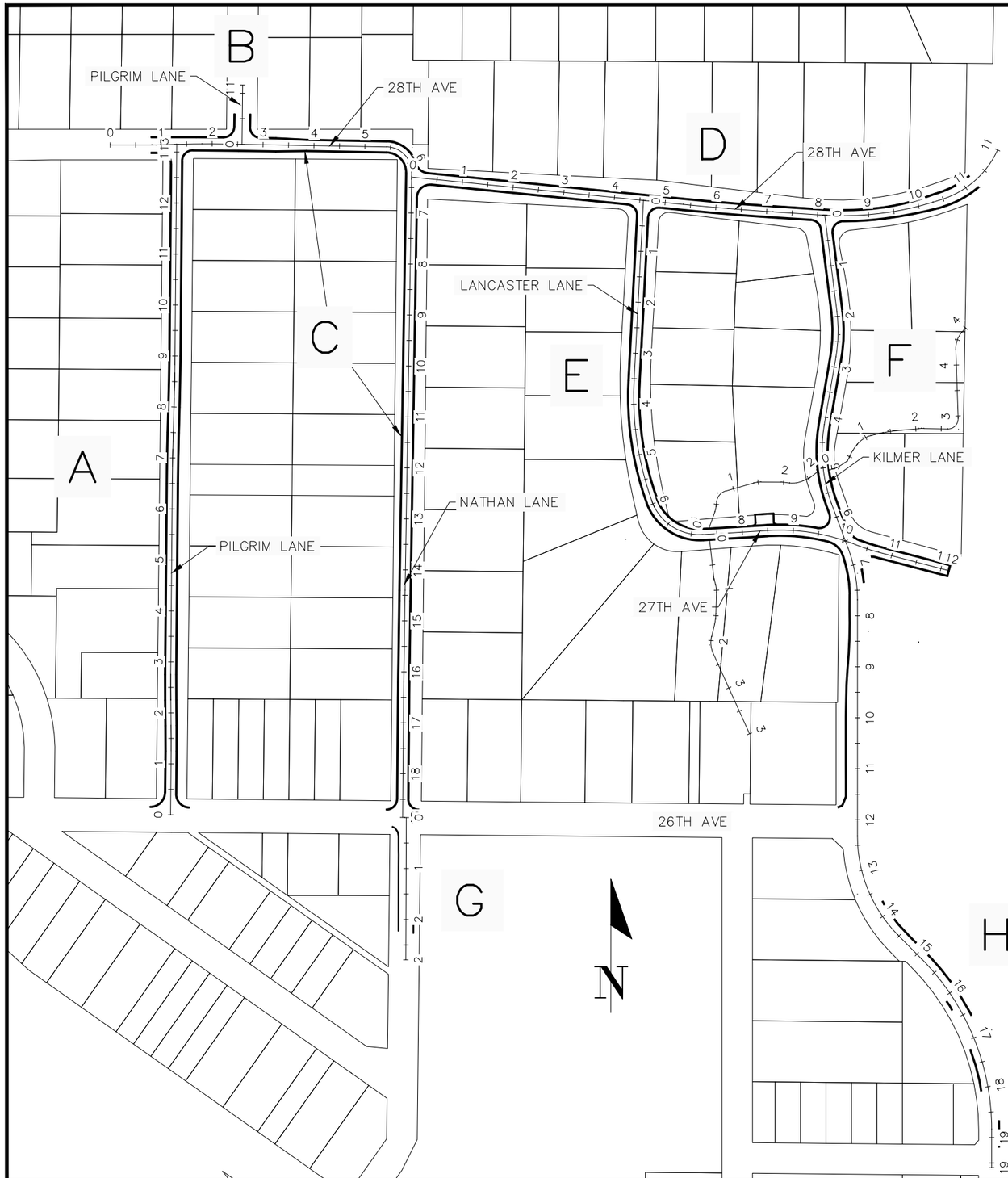

SHEET INDEX								
SHEET DESCRIPTION	SHEET NO.							
	A	B	C	D	E	F	G	H
REMOVALS PLAN	19	19	19-20	20	21	22	20	22
CONSTRUCTION PLANS	23	24	24-25	26	27-28	38-39	-	29-30
STORM SEWER & PLANS & PROFILES	44	-	45-46	47	48-49	50-51	46	50-51
INTERSECTION DETAILS	31-32	33	34-35	34,36-37	36,38-39	37-39	-	-
EROSION CONTROL & RESTORATION	58	59	58-59	59	60	61	59	61

NO	DATE	BY	CKD	APPR	REVISION

I hereby certify that this plan, specification or report was prepared by me or under my direct supervision and that I am a duly Licensed Professional Engineer under the laws of the State of Minnesota.

Signature: MICHAEL J. PAYNE

Date: 3-13-18 License#: 50484

City of Plymouth

PLYMOUTH, MINNESOTA
KILMER PARK STREET
RECONSTRUCTION

LAYOUT

STATE AID PROJECT NO.	DRAWN BY	DATE
----	M. PAYNE	2-18
COUNTY PROJECT NO.	DESIGNED BY	
----	M. PAYNE	2-18
	CHECKED BY	
CITY PROJECT NO.	M. PAYNE	2-18
ST189001.001	REVIEWED BY	
	J. RENNEBERG	2-18

GENERAL NOTES:

GRADING, BASE, AND SURFACE

1. SUITABLE GRADING MATERIAL ON THIS PROJECT, WHETHER OBTAINED LOCALLY OR FROM BORROW, SHALL CONSIST OF ALL SOILS EXCEPT TOPSOIL, DEBRIS, PEAT, MUCK, AND ORGANIC OR OTHER UNSTABLE MATERIAL.
2. UNSUITABLE MATERIALS ARE TOPSOILS, DEBRIS, PEAT, MUCK, AND ORGANIC OR OTHER UNSTABLE SOIL.
3. SELECT GRANULAR MATERIAL IS DEFINED AS MATERIAL MEETING THE REQUIREMENTS OF SPEC. 3149.2B2.
4. STRIP SOD AND TOPSOIL FROM AREAS TO BE DISTURBED BY CONSTRUCTION AND REUSE AS SLOPE DRESSING. FOR ESTIMATING PURPOSES THE DEPTH OF TOPSOIL AVAILABLE IS CONSIDERED TO BE 6".
5. ALL TOPSOIL STRIPPING WILL BE CONSIDERED TO BE COMMON EXCAVATION.
6. EXCESS TOPSOIL AND MUCK MATERIAL SHALL BE USED THROUGHOUT THE PROJECT AND AS DIRECTED BY THE ENGINEER.
7. THE BOTTOM OF ALL SUBCUTS SHALL BE SHAPED AND COMPACTED BY THE "QUALITY COMPACTION METHOD". THE CONTRACTOR SHALL USE A MINIMUM OF 4 PASSES OF AN APPROVED COMPACTION DEVICE.
8. WHERE CONNECTING TO THE INPLACE ROADWAYS AT THE TERMINI OF PROPOSED CONSTRUCTION, CUT VERTICALLY TO THE BOTTOM OF THE INPLACE SURFACING OR TO THE BOTTOM OF THE NEW SURFACING, WHICHEVER IS DEEPER, THEN 1V:20H TO THE BOTTOM OF THE RECOMMENDED SUBGRADE EXCAVATION, UNLESS OTHERWISE NOTED.
9. DITCH BOTTOMS, TOE OF FILL, CUT RUNOUTS, AND THE TOP EDGE OF THE BACKSLOPES SHALL BE ROUNDED REGARDLESS OF THE SECTION USED ON THE CROSS SECTION SHEETS.
10. PROVIDE FOR A UNIFORM BITUMINOUS TACK COAT BETWEEN ALL BITUMINOUS COURSES. THE TACK COAT SHALL BE IN ACCORDANCE WITH MN/DOT SPECIFICATION 2357 WITH THE FOLLOWING MODIFICATIONS:
    10.1. THE TACK COAT SHALL CONSIST OF EMULSIFIED ASPHALT (CSS-1 OR CSS-1H) AND SHALL BE APPLIED BETWEEN ALL BITUMINOUS COURSES.
11. THE TACK COAT SHALL BE APPLIED AT A UNIFORM RATE OF 0.03 TO 0.05 GAL/SY BETWEEN BITUMINOUS LAYERS AND 0.07 TO 0.10 GAL/SY ON MILLED BITUMINOUS SURFACES PRIOR TO BEING OVERLAID.
12. ALL EXCESS EXCAVATED MATERIAL IS THE PROPERTY OF THE CONTRACTOR.

REMOVALS

13. PROVIDE FOR THE REMOVAL AND DISPOSAL OF ANY INPLACE SURFACING, GUARDRAIL, OTHER STRUCTURES OR DEBRIS THAT WOULD INTERFERE WITH CONSTRUCTION. ALL SUCH MATERIALS SHALL BECOME THE PROPERTY OF THE CONTRACTOR AND SHALL EITHER BE RECYCLED TO THE EXTENT ALLOWED OR DISPOSED OF OFF THE RIGHT OF WAY IN ACCORDANCE WITH THE SPEC 2140.3C. PROVIDE FOR SAW CUTTING AS DEEMED NECESSARY BY THE ENGINEER.
14. ALL USEABLE SALVAGED CASTINGS, VALVES, SIGNS, HYDRANTS, ETC. SHALL BE DELIVERED TO THE CITY OF PLYMOUTH PUBLIC WORKS.
15. NO TREES OR SHRUBS ARE TO BE REMOVED UNLESS MARKED BY THE CITY OF PLYMOUTH FOR REMOVAL.
16. TREES AND SHRUBS UNDER 4" DIA. ARE NOT SHOWN ON PLAN. TREES TO BE REMOVED MAY NOT BE SHOWN ON PLAN.
17. ALL PAVEMENT, INCLUDING DRIVEWAYS, IS TO BE SAWCUT AT THE MATCH POINT (INCIDENTAL).

TURF ESTABLISHMENT

18. PLACE A MINIMUM OF 4 INCHES OF TOPSOIL ON ALL AREAS SCHEDULED FOR PERMANENT TURF ESTABLISHMENT.
19. ALL DISTURBED AREAS SHALL BE RESTORED WITH SOD.

MISCELLANEOUS

20. ALL TRAFFIC CONTROL DEVICES SHALL CONFORM TO THE LATEST EDITION OF THE MINNESOTA MANUAL ON UNIFORM TRAFFIC CONTROL DEVICES, INCLUDED THE FIELD MANUAL FOR TEMPORARY TRAFFIC CONTROL ZONE LAYOUTS.
21. THE CONTRACTOR MUST SUBMIT A TRAFFIC CONTROL PLAN FOR APPROVAL, ADDRESSING ANY TEMPORARY CLOSURES OR DETOURS. REVIEW IS REQUIRED BY THE CITY OF PLYMOUTH.
22. THE EXACT LOCATION OF UNDERGROUND UTILITIES SUCH AS GAS, TELEPHONE, WATER, ETC. ARE UNKNOWN.
23. THE CONTRACTOR IS HEREBY REMINDED OF HIS RESPONSIBILITY UNDER STATE LAW TO CONTACT ALL UTILITIES THAT MAY HAVE FACILITIES IN THE AREA. CONTACT MUST BE MADE THROUGH GOPHER STATE ONE CALL.
24. WHENEVER THE WORD "INCIDENTAL" IS USED IN THIS PLAN, IT SHALL MEAN THIS WORK WILL BE INCIDENTAL FOR WHICH NO DIRECT COMPENSATION WILL BE MADE.
25. THE STRUCTURE LOCATIONS AND ELEVATION OF APPURTANCES SHOWN ON THE PLAN ARE APPROXIMATE AND SHALL BE FIELD VERIFIED PRIOR TO COMMENCING ANY UTILITY INSTALLATION.
26. ACCESS TO LOCAL RESIDENTS MUST BE MAINTAINED AT ALL TIMES THROUGHOUT CONSTRUCTION.
27. CONTRACTOR SHALL TEMPORARILY RELOCATE MAILBOXES DURING CONSTRUCTION AND COORDINATE WITH THE U.S. POSTAL SERVICE.
28. A MINIMUM OF 48 HRS. NOTICE IS REQUIRED FOR ALL SURVEY STAKING REQUESTS.
29. CONTRACTOR MUST MAINTAIN EROSION CONTROL FOR THE ENTIRE PROJECT.
30. THE 2018 CITY OF PLYMOUTH ENGINEERING STANDARD DETAIL SPECIFICATIONS FOR SEWER, WATER, STORM SEWER, & STREETS APPLY TO THIS PROJECT.
31. CONTRACTOR SHALL PROVIDE 48 HOUR NOTICE TO CITY AND AFFECTED RESIDENTS WHEN WATER SERVICE WILL BE DISRUPTED.
32. NO RESIDENT SHALL BE WITHOUT WATER SERVICE BEFORE 9AM OR AFTER 3PM WEEKDAYS AND NO DISRUPTION ON WEEKENDS.
33. PRIOR TO THE INSTALLATION OF WEAR COURSE PAVEMENT A LEAK TEST SHALL BE PERFORMED ON ALL WATER MAIN TO ENSURE NO LEAKS ARE PRESENT. LEAK TEST SHALL BE PERFORMED BY ENGINEER. ENGINEER SHALL HAVE TWO WEEKS TO PERFORM LEAK TEST UPON NOTIFICATION OF CONTRACTOR.

EARTHWORK SUMMARY	
COMMON EXCAVATION (CV) (CY)	EMBANKMENT (CV) (CY)
18,296	770

NO	DATE	BY	CKD	APPR	REVISION

I hereby certify that this plan, specification or report was prepared by me or under my direct supervision and that I am a duly Licensed Professional Engineer under the laws of the State of Minnesota.

Signature: MICHAEL J. PAYNE

Date: 3-13-18 License#: 50484

City of Plymouth

PLYMOUTH, MINNESOTA
KILMER PARK STREET RECONSTRUCTION

GENERAL NOTES

STATE AID PROJECT NO.	DRAWN BY M. PAYNE	DATE 2-18
COUNTY PROJECT NO.	DESIGNED BY M. PAYNE	2-18
CITY PROJECT NO. ST189001.001	CHECKED BY M. PAYNE	2-18
	REVIEWED BY J. RENNEBERG	2-18

STREET RECONSTRUCTION TYPICAL SECTION

ALL STREETS UNLESS OTHERWISE NOTED

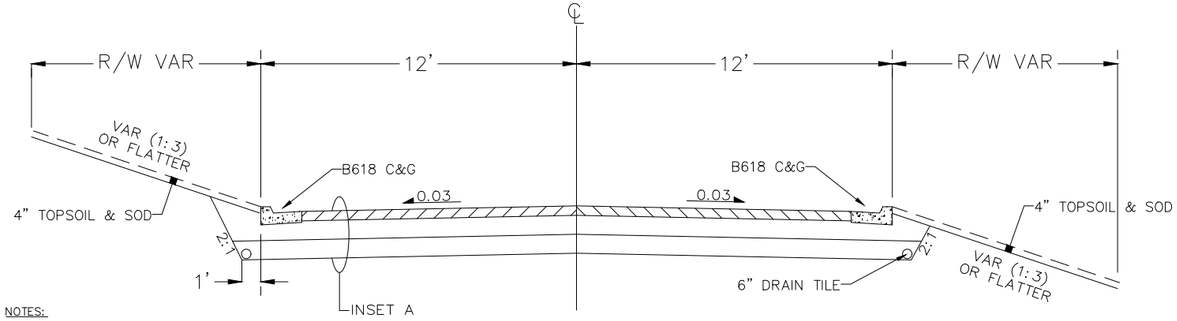

NOTES:

1. ALL SLOPES ARE FT. PER FT.
2. SEE CONSTRUCTION PLANS AND PROFILES FOR SUPERELEVATION TRANSITIONS.

KILMER LANE (STA 7+30 – 12+30) & NATHAN STORM SEWER (SOUTH OF 26TH AVE)

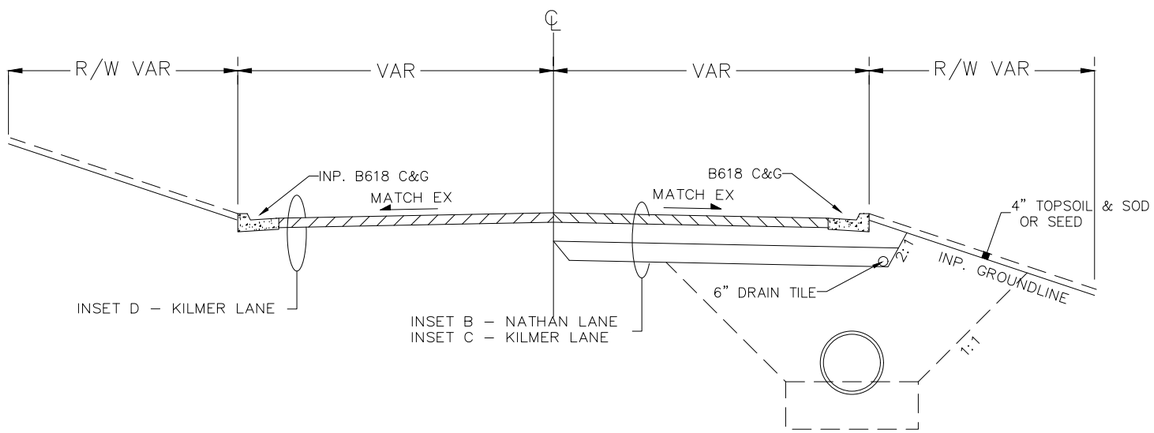

STREET RECONSTRUCTION TYPICAL SECTION

KILMER LANE SOUTH OF 26TH AVE

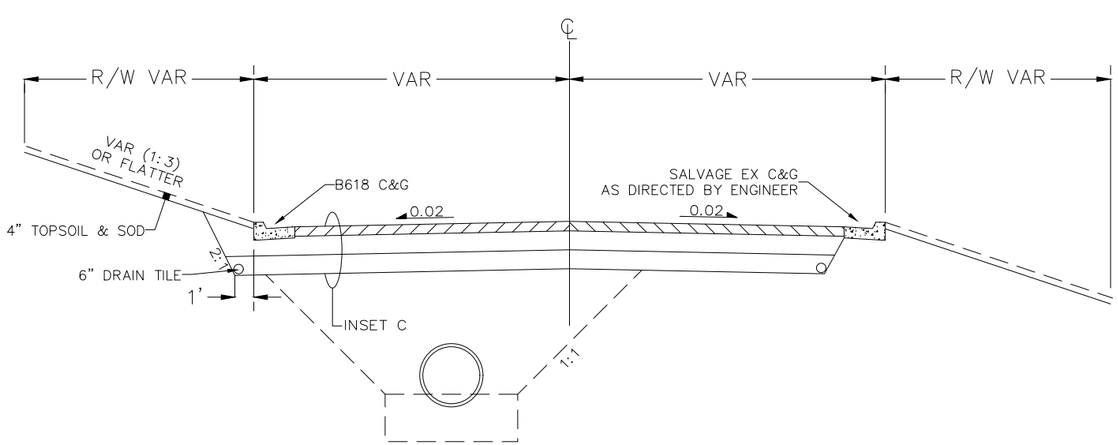

INSET A

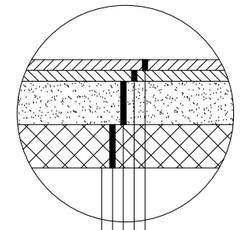

- SPEC 2360 1.5" TYPE SP 9.5 WEARING COURSE MIX. SPWEA240C
- SPEC 2360 2.5" TYPE SP 12.5 NONWEARING COURSE MIX. SPNWB230C
- 8" AGGREGATE BASE (CV) CLASS 5
- 12" SELECT GRANULAR SPEC 3149.2B2
- GEOTEXTILE FILTER FABRIC TYPE V (AS DIRECTED BY ENGINEER)

INSET B

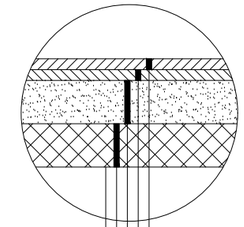

- SPEC 2360 1.5" TYPE SP 9.5 WEARING COURSE MIX. SPWEA240C
- SPEC 2360 2.5" TYPE SP 12.5 NONWEARING COURSE MIX. SPNWB230C
- 8" AGGREGATE BASE (CV) CLASS 5
- 12" SELECT GRANULAR SPEC 3149.2B2
- GEOTEXTILE FILTER FABRIC TYPE V (AS DIRECTED BY ENGINEER)

INSET C

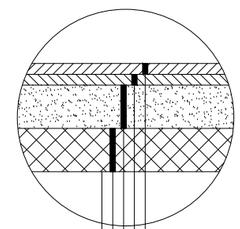

- SPEC 2360 1.5" TYPE SP 9.5 WEARING COURSE MIX. SPWEA340C
- SPEC 2360 2.5" TYPE SP 12.5 NONWEARING COURSE MIX. SPNWB330C
- 8" AGGREGATE BASE (CV) CLASS 5
- 12" SELECT GRANULAR SPEC 3149.2B2
- GEOTEXTILE FILTER FABRIC TYPE V (AS DIRECTED BY ENGINEER)

INSET D

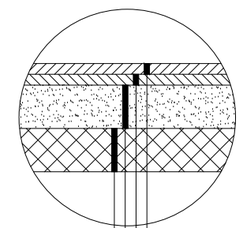

- 1.5" MILL & OVERLAY
- SPEC 2360 1.5" TYPE SP 9.5 WEARING COURSE MIX. SPWEA340C
- EXISTING PAVEMENT
- EXISTING BASE
- EXISTING SUBGRADE

DITCH GRADING

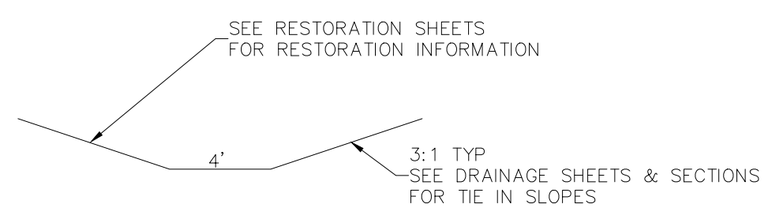

NO	DATE	BY	CKD	APPR	REVISION

I hereby certify that this plan, specification or report was prepared by me or under my direct supervision and that I am a duly Licensed Professional Engineer under the laws of the State of Minnesota.

Signature: MICHAEL J. PAYNE

Date: 3–13–18 License#: 50484

City of Plymouth

PLYMOUTH, MINNESOTA
KILMER PARK STREET RECONSTRUCTION

TYPICAL SECTIONS

STATE AID PROJECT NO.	DRAWN BY	DATE
----	M. PAYNE	2–18
COUNTY PROJECT NO.	DESIGNED BY M. PAYNE	2–18
----	CHECKED BY M. PAYNE	2–18
CITY PROJECT NO. ST189001.001	REVIEWED BY J. RENNEBERG	2–18

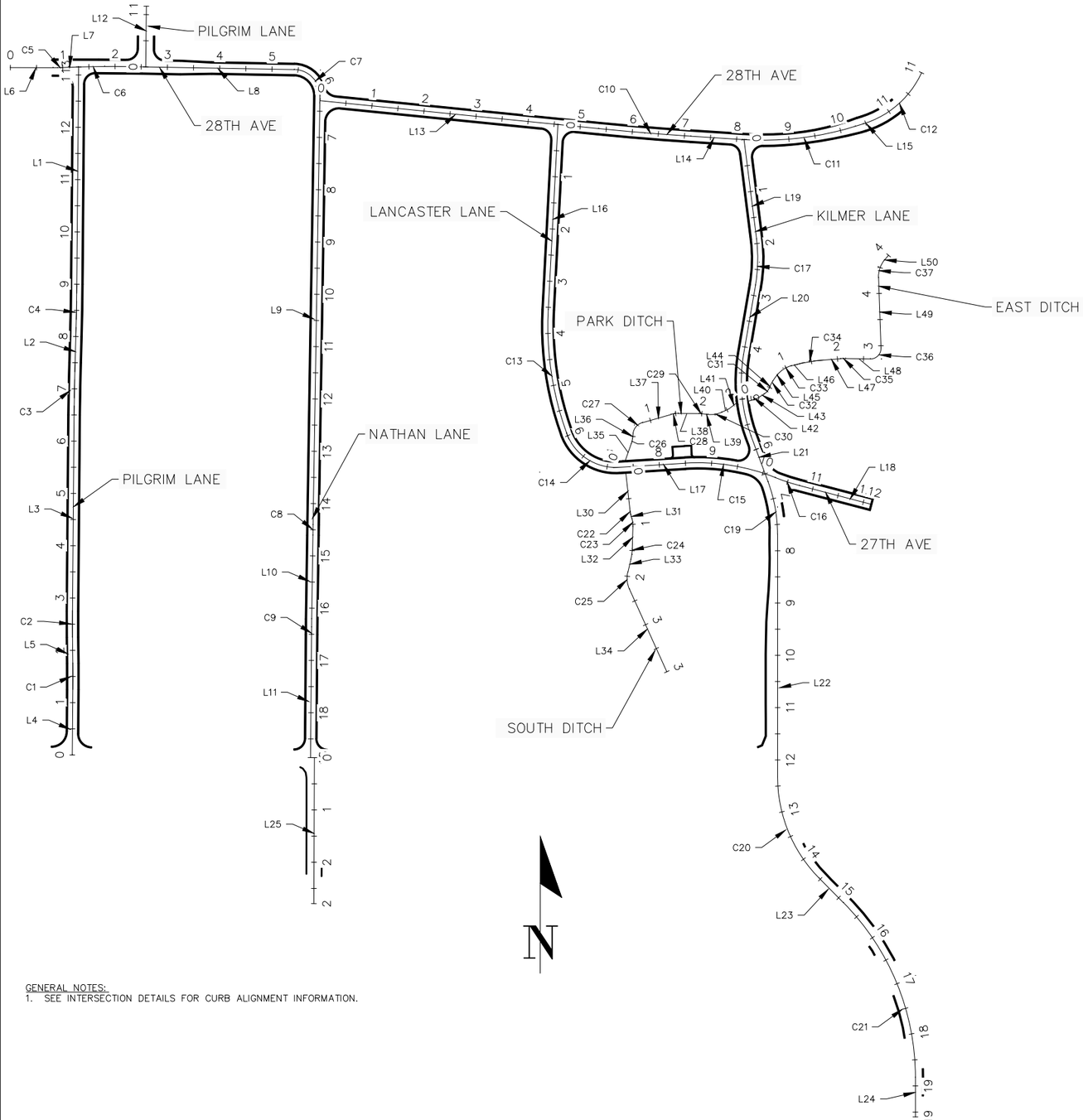

GENERAL NOTES:
1. SEE INTERSECTION DETAILS FOR CURB ALIGNMENT INFORMATION.

℄ PILGRIM LANE

SEGMENT NUMBER	BEGIN STATION	DELTA	DEGREE	RADIUS	TANGENT	LENGTH	X	Y	AZIMUTH	END STATION
L4	0+00.00					125.005	493751.8231	178905.4322	0° 29' 10.10"	1+25.00
C1	1+25.00	1°08'45.14"	2°17'30.59"	2500.00	25.000	49.998	493752.8837	179030.4326	0° 29' 10.10" 359° 20' 24.97"	1+75.00
L5	1+75.00					50.011	493752.8080	179080.4298	359° 20' 24.97"	2+25.01
C2	2+25.01	1°08'45.14"	2°17'30.59"	2500.00	25.000	49.998	493752.2321	179130.4373	359° 20' 24.97" 0° 29' 10.10"	2+75.01
L3	2+75.01					375.010	493752.1564	179180.4345	0° 29' 10.10"	6+50.02
C3	6+50.02	1°08'44.75"	1°08'45.30"	5000.00	49.995	99.987	493755.3382	179555.4308	0° 29' 10.10" 1° 37' 54.85"	7+50.01
L2	7+50.01					50.040	493757.1862	179655.3987	1° 37' 54.85"	8+00.05
C4	8+00.05	1°08'44.75"	1°08'45.30"	5000.00	49.995	99.987	493758.6112	179705.4184	1° 37' 54.85" 0° 29' 10.10"	9+00.04
L1	9+00.04					415.204	493760.4592	179805.3863	0° 29' 10.10"	13+15.24

℄ 28TH AVE & NATHAN LANE

SEGMENT NUMBER	BEGIN STATION	DELTA	DEGREE	RADIUS	TANGENT	LENGTH	X	Y	AZIMUTH	END STATION
L6	0+00.00					81.666	493633.5230	180219.4135	90° 04' 55.66"	0+81.67
C5	0+81.67	1°54'32.95"	11°27'32.96"	500.00	8.331	16.660	493715.1891	180219.2964	90° 04' 55.66" 88° 10' 22.71"	0+98.33
L7	0+98.33					31.866	493731.8469	180219.5501	88° 10' 22.71"	1+30.19
C6	1+30.19	2°51'42.36"	2°51'53.24"	2000.00	49.958	99.895	493763.6967	180220.5661	88° 10' 22.71" 91° 02' 05.08"	2+30.09
L8	2+30.09					312.552	493863.5785	180221.2567	91° 02' 05.08"	5+42.64
C7	5+42.64	89°53'05.27"	114°35'29.61"	50.00	49.900	78.439	494176.0797	180215.6124	91° 02' 05.08" 180° 55' 10.35"	6+21.08
L9	6+21.08					819.569	494225.1703	180164.8181	180° 55' 10.35"	14+40.65
C8	14+40.65	0°06'52.86"	0°34'22.65"	10000.00	10.008	20.016	494212.0176	179345.3545	180° 55' 10.35" 180° 48' 17.49"	14+60.66
L10	14+60.66					159.990	494211.7164	179325.3407	180° 48' 17.49"	16+20.65
C9	16+20.65	0°20'37.57"	1°08'45.30"	5000.00	15.000	30.000	494209.4690	179165.3668	180° 48' 17.49" 180° 27' 39.91"	16+50.65
L11	16+50.65					235.005	494209.1376	179135.3690	180° 27' 39.91"	18+85.66

℄ PILGRIM LANE (NORTH)

SEGMENT NUMBER	BEGIN STATION	DELTA	DEGREE	RADIUS	TANGENT	LENGTH	X	Y	AZIMUTH	END STATION
L12	0+00.00					116.129	493892.1499	180220.7406	0° 35' 09.64"	1+16.13

℄ 28TH AVE (EAST)

SEGMENT NUMBER	BEGIN STATION	DELTA	DEGREE	RADIUS	TANGENT	LENGTH	X	Y	AZIMUTH	END STATION
L13	0+00.00					535.578	494225.0338	180156.3088	95° 44' 10.63"	5+35.58
C10	5+35.58	2°01'31.50"	1°08'45.30"	5000.00	88.385	176.751	494757.9295	180102.7779	95° 44' 10.63" 93° 42' 39.13"	7+12.33
L14	7+12.33					98.737	494934.0710	180088.2234	93° 42' 39.13"	8+11.07
C11	8+11.07	20°50'22.20"	9°32'57.47"	600.00	110.334	218.231	495032.6009	180081.8330	93° 42' 39.13" 72° 52' 16.93"	10+29.30
L15	10+29.30					16.694	495248.1446	180107.1874	72° 52' 16.93"	10+45.99
C12	10+45.99	48°24'35.81"	31°49'51.56"	180.00	80.914	152.084	495264.0982	180112.1041	72° 52' 16.93" 24° 27' 41.12"	11+98.07

NO	DATE	BY	CKD	APPR	REVISION

I hereby certify that this plan, specification or report was prepared by me or under my direct supervision and that I am a duly Licensed Professional Engineer under the laws of the State of Minnesota.

Signature: MICHAEL J. PAYNE

Date: 3-13-18 License#: 50484

City of Plymouth

PLYMOUTH, MINNESOTA
KILMER PARK STREET
RECONSTRUCTION

ALIGNMENT TABULATION

STATE AID PROJECT NO.	DRAWN BY	DATE
____	M. PAYNE	2-18
COUNTY PROJECT NO.	DESIGNED BY	
____	M. PAYNE	2-18
	CHECKED BY	
	M. PAYNE	2-18
CITY PROJECT NO.	REVIEWED BY	
ST189001.001	J. RENNEBERG	2-18

℄ LANCASTER LANE & 27TH AVE

SEGMENT NUMBER	BEGIN STATION	DELTA	DEGREE	RADIUS	TANGENT	LENGTH	X	Y	AZIMUTH	END STATION
L16	0+00.00					354.649	494679.8580	180110.6204	182° 58' 19.49"	3+54.65
C13	3+54.65	22°52'49.12"	9°32'57.47"	600.00	121.419	239.602	494661.4697	179756.4483	182° 58' 19.49" 160° 05' 30.38"	5+94.25
C14	5+94.25	73°36'05.54"	57°17'44.81"	100.00	74.812	128.459	494696.5191	179521.0300	160° 05' 30.38" 86° 29' 24.83"	7+22.71
L17	7+22.71					126.952	494796.6649	179455.2690	86° 29' 24.83"	8+49.66
C15	8+49.66	25°09'08.07"	14°19'26.20"	400.00	89.236	175.596	494923.3788	179463.0408	86° 29' 24.83" 111° 38' 32.91"	10+25.26
C16	10+25.26	6°59'16.57"	14°19'26.20"	400.00	24.423	48.785	495095.3918	179435.5924	111° 38' 32.91" 104° 39' 16.33"	10+74.04
L18	10+74.04					142.875	495141.7211	179420.4062	104° 39' 16.33"	12+16.92

℄ KILMER LANE

SEGMENT NUMBER	BEGIN STATION	DELTA	DEGREE	RADIUS	TANGENT	LENGTH	X	Y	AZIMUTH	END STATION
L19	0+00.00					191.522	495035.6820	180081.6411	172° 50' 12.11"	1+91.52
C17	1+91.52	16°54'22.77"	19°05'54.94"	300.00	44.585	88.521	495059.5644	179891.6143	172° 50' 12.11" 189° 44' 34.87"	2+80.04
L20	2+80.04					134.897	495057.5789	179803.4361	189° 44' 34.87"	4+14.94
C18	4+14.94	30°06'01.27"	19°05'54.94"	300.00	80.666	157.605	495034.7503	179670.4845	189° 44' 34.87" 159° 38' 33.60"	5+72.55
L21	5+72.55					93.480	495049.1610	179515.3535	159° 38' 33.60"	6+66.02
C19	6+66.02	20°21'06.52"	19°45'25.80"	290.00	52.053	103.010	495081.6801	179427.7125	159° 38' 33.60" 179° 59' 40.12"	7+69.03
L22	7+69.03					463.723	495099.7931	179326.8571	179° 59' 40.12"	12+32.76
C20	12+32.76	44°41'43.72"	20°50'05.38"	275.00	113.053	214.523	495099.8378	178863.1342	179° 59' 40.12" 135° 17' 56.39"	14+47.28
L23	14+47.28					66.187	495179.3713	178669.7237	135° 17' 56.39"	15+13.47
C21	15+13.47	44°41'54.97"	12°03'44.17"	475.00	195.289	370.565	495225.9277	178622.6789	135° 17' 56.39" 179° 59' 51.37"	18+84.03
L24	18+84.03					75.026	495363.3038	178288.5804	179° 59' 51.37"	19+59.06

℄ NATHAN LANE (SOUTH)

SEGMENT NUMBER	BEGIN STATION	DELTA	DEGREE	RADIUS	TANGENT	LENGTH	X	Y	AZIMUTH	END STATION
L25	0+00.00					279.129	494214.4921	178900.2915	180° 11' 31.84"	2+79.13

℄ SOUTH DITCH

SEGMENT NUMBER	BEGIN STATION	DELTA	DEGREE	RADIUS	TANGENT	LENGTH	X	Y	AZIMUTH	END STATION
L30	0+00.00					73.613	494809.6052	179445.0420	173° 29' 48.02"	0+73.61
C22	0+73.61	9°04'13.32"	114°35'29.61"	50.00	3.966	7.915	494817.9427	179371.9028	173° 29' 48.02" 164° 25' 34.71"	0+81.53
L31	0+81.53					7.538	494819.4567	179364.1419	164° 25' 34.71"	0+89.07
C23	0+89.07	17°08'26.68"	114°35'29.61"	50.00	7.535	14.958	494821.4804	179356.8807	164° 25' 34.71" 181° 34' 01.39"	1+04.02
L32	1+04.02					42.682	494823.2974	179342.0895	181° 34' 01.39"	1+46.71
C24	1+46.71	11°51'59.32"	57°17'44.81"	100.00	10.393	20.711	494822.1302	179299.4237	181° 34' 01.39" 193° 26' 00.71"	1+67.42
L33	1+67.42					24.979	494819.4316	179278.9266	193° 26' 00.71"	1+92.40
C25	1+92.40	37°46'05.62"	114°35'29.61"	50.00	17.103	32.959	494813.6285	179254.6307	193° 26' 00.71" 155° 39' 55.09"	2+25.36
L34	2+25.36					173.301	494816.7028	179222.4115	155° 39' 55.09"	3+98.66

℄ PARK DITCH

SEGMENT NUMBER	BEGIN STATION	DELTA	DEGREE	RADIUS	TANGENT	LENGTH	X	Y	AZIMUTH	END STATION
L35	0+00.00					34.801	494808.2584	179467.0007	19° 40' 10.28"	0+34.80
C26	0+34.80	12°15'06.36"	114°35'29.61"	50.00	5.366	10.692	494819.9723	179499.7711	19° 40' 10.28" 7° 25' 03.92"	0+45.49
L36	0+45.49					9.823	494822.4713	179510.1457	7° 25' 03.92"	0+55.32
C27	0+55.32	66°37'18.04"	229°10'59.22"	25.00	16.429	29.069	494823.7395	179519.8867	7° 25' 03.92" 74° 02' 21.96"	0+84.39
L37	0+84.39					56.887	494841.6559	179540.6954	74° 02' 21.96"	1+41.27
C28	1+41.27	16°16'18.20"	114°35'29.61"	50.00	7.148	14.200	494896.3498	179556.3378	74° 02' 21.96" 90° 18' 40.16"	1+55.47
L38	1+55.47					39.675	494910.3701	179558.2646	90° 18' 40.16"	1+95.15
C29	1+95.15	6°05'51.33"	114°35'29.61"	50.00	2.663	5.321	494950.0449	179558.0491	90° 18' 40.16" 96° 24' 31.48"	2+00.47
L39	2+00.47					11.442	494955.3544	179557.7374	96° 24' 31.48"	2+11.91
C30	2+11.91	30°56'04.80"	114°35'29.61"	50.00	13.836	26.996	494966.7246	179556.4602	96° 24' 31.48" 65° 28' 26.68"	2+38.91
L40	2+38.91					14.440	494993.0609	179560.6591	65° 28' 26.68"	2+53.35
L41	2+53.35					20.000	495006.1977	179566.6531	52° 49' 56.12"	2+73.35

℄ EAST DITCH

SEGMENT NUMBER	BEGIN STATION	DELTA	DEGREE	RADIUS	TANGENT	LENGTH	X	Y	AZIMUTH	END STATION
L42	0+00.00					16.000	495043.9432	179581.6350	73° 31' 51.53"	0+16.00
L43	0+16.00					17.382	495059.2868	179586.1709	58° 16' 34.66"	0+33.38
C31	0+33.38	33°31'13.46"	229°10'59.23"	25.00	7.529	14.626	495074.0719	179595.3108	58° 16' 34.66" 24° 45' 21.20"	0+48.01
L44	0+48.01					3.533	495083.6288	179606.1068	24° 45' 21.20"	0+51.54
C32	0+51.54	14°23'25.00"	57°17'44.81"	100.00	12.624	25.116	495085.1082	179609.3149	24° 45' 21.20" 39° 08' 46.20"	0+76.66
L45	0+76.66					2.423	495098.3644	179630.5697	39° 08' 46.20"	0+79.08
C33	0+79.08	36°12'58.22"	114°35'29.61"	50.00	16.350	31.605	495099.8939	179632.4487	39° 08' 46.20" 75° 21' 44.42"	1+10.68
L46	1+10.68					6.651	495126.0355	179649.2608	75° 21' 44.42"	1+17.34
C34	1+17.34	10°01'06.20"	17°54'10.30"	320.04	28.051	55.960	495132.4708	179650.9416	75° 21' 44.42" 85° 22' 50.62"	1+73.29
L47	1+73.29					32.949	495187.5720	179660.2894	85° 22' 50.62"	2+06.24
C35	2+06.24	5°33'18.15"	57°17'44.81"	100.00	4.851	9.695	495220.4138	179662.9429	85° 22' 50.62" 90° 56' 08.78"	2+15.94
L48	2+15.94					47.022	495230.1004	179663.2544	90° 56' 08.78"	2+62.96
C36	2+62.96	92°54'24.34"	286°28'44.03"	20.00	21.041	32.431	495277.1163	179662.4865	90° 56' 08.78" 358° 01' 44.43"	2+95.39
L49	2+95.39					134.815	495297.4311	179683.1717	358° 01' 44.43"	4+30.21
C37	4+30.21	42°00'30.31"	114°35'29.61"	50.00	19.197	36.659	495292.7943	179817.9068	358° 01' 44.43" 40° 02' 14.74"	4+66.87
L50	4+66.87					11.549	495304.4835	179851.7909	40° 02' 14.74"	4+78.41

NO	DATE	BY	CKD	APPR	REVISION

I hereby certify that this plan, specification or report was prepared by me or under my direct supervision and that I am a duly Licensed Professional Engineer under the laws of the State of Minnesota.

Signature: MICHAEL J. PAYNE

Date: 3–13–18 License#: 50484

City of Plymouth

PLYMOUTH, MINNESOTA
KILMER PARK STREET RECONSTRUCTION

ALIGNMENT TABULATION

STATE AID PROJECT NO.	DRAWN BY	DATE
----	M. PAYNE	2–18
COUNTY PROJECT NO.	DESIGNED BY	
----	M. PAYNE	2–18
CITY PROJECT NO.	CHECKED BY	
ST189001.001	M. PAYNE	2–18
	REVIEWED BY	
	J. RENNEBERG	2–18

CITY OF PLYMOUTH [6"]

IMPROVEMENT PROJECT: [3"]
(PROJECT NAME) [3"]
(PROJECT NO.) [2-1/2"]

PROCEED WITH CAUTION [6"]

FOR INFORMATION CALL: [2-1/2"]
PROJECT HOTLINE NO. (763) 509-55XX [WHERE APPLICABLE]
PROJECT WEBSITE WWW.PLYMOUTHMN.GOV [WHERE APPLICABLE]

(NAME OF CONSULTING ENGINEER) CITY ENGINEERING DIVISION:
(NAME OF PROJECT MANAGER) [2-1/2"] (CITY REPRESENTATIVE)
(PHONE NO.) PHONE NO. (763) 509-5500

(CONTRACTOR'S NAME) SCHEDULED COMPLETION DATE:
(ADDRESS) [2-1/2"] (DATE)
(LOCAL PHONE NO.)

NOTE:
Sign shall be 4' x 6' with a white background with black letters, (no hand lettering) and of proper height to be readily visible from an automobile, and located as directed by engineer. Sign shall be mounted on 4"x 4" posts

( ) Project Specific Information

STANDARD DETAILS
STANDARD CITY PROJECT SIGN
CITY OF PLYMOUTH

PUBLISHED 1-18
CITY PL. NO. DWG-1
REVISED 3-11

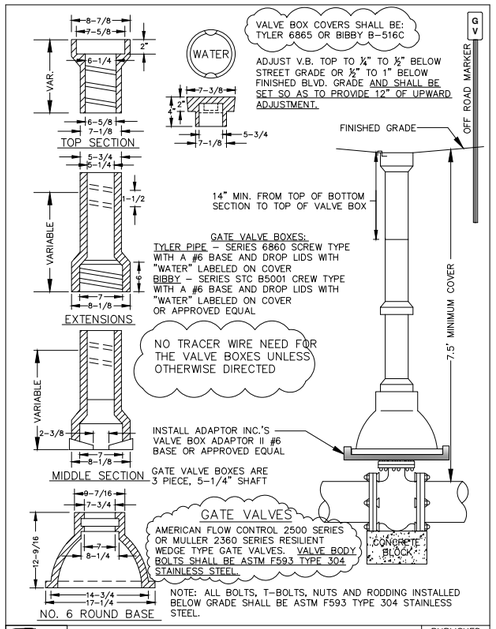

STANDARD DETAILS
GATE VALVE AND BOX INSTALLATION
CITY OF PLYMOUTH

PUBLISHED 1-18
CITY PL. NO. W-4
REVISED 1-18

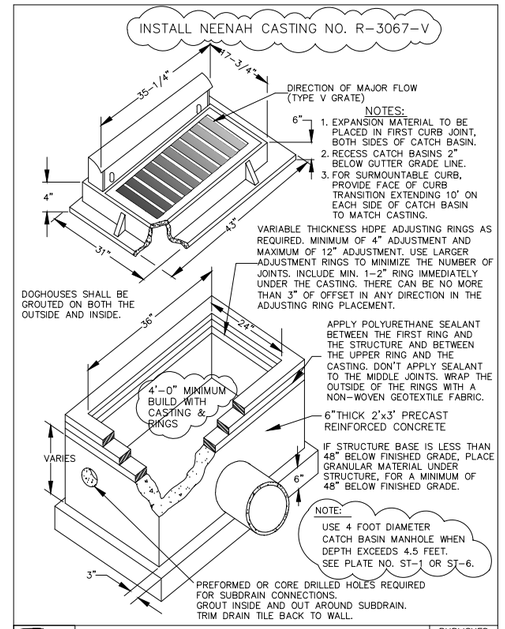

STANDARD DETAILS
CATCH BASIN (MAX. DEPTH 4.5')
CITY OF PLYMOUTH

PUBLISHED 1-18
CITY PL. NO. ST-2
REVISED 1-17

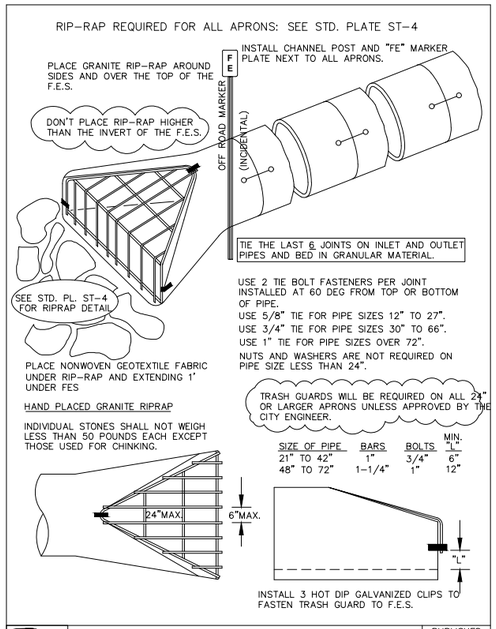

STANDARD DETAILS
INLET & OUTLET F.E.S. WITH TRASH GUARD
CITY OF PLYMOUTH

PUBLISHED 1-18
CITY PL. NO. ST-3
REVISED 1-17

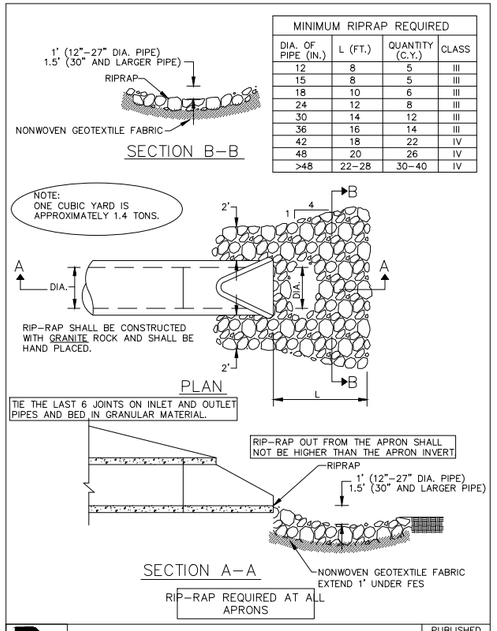

MINIMUM RIPRAP REQUIRED

DIA. OF PIPE (IN.)	L (FT.)	QUANTITY (C.Y.)	CLASS
12	8	5	III
15	8	5	III
18	10	6	III
24	12	8	III
30	14	12	III
36	16	14	III
42	18	22	IV
48	20	26	IV
>48	22-28	30-40	IV

STANDARD DETAILS
RIPRAP DETAIL FOR FLARED END SECTIONS
CITY OF PLYMOUTH

PUBLISHED 1-18
CITY PL. NO. ST-4
REVISED 1-17

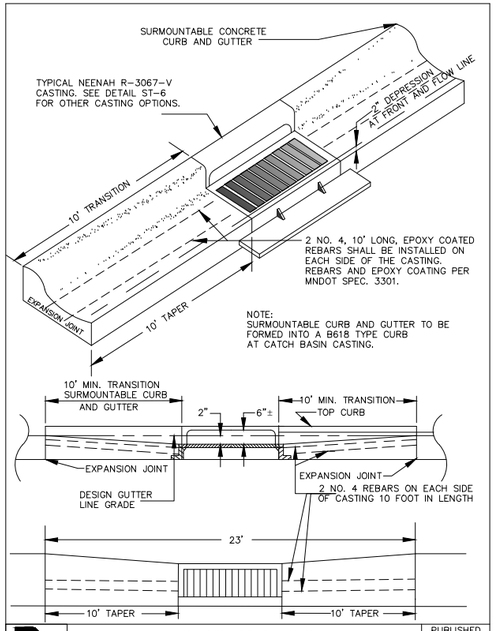

STANDARD DETAILS
CATCH BASIN CASTING INSTALLATION DETAIL
CITY OF PLYMOUTH

PUBLISHED 1-18
CITY PL. NO. ST-5
REVISED 3-13

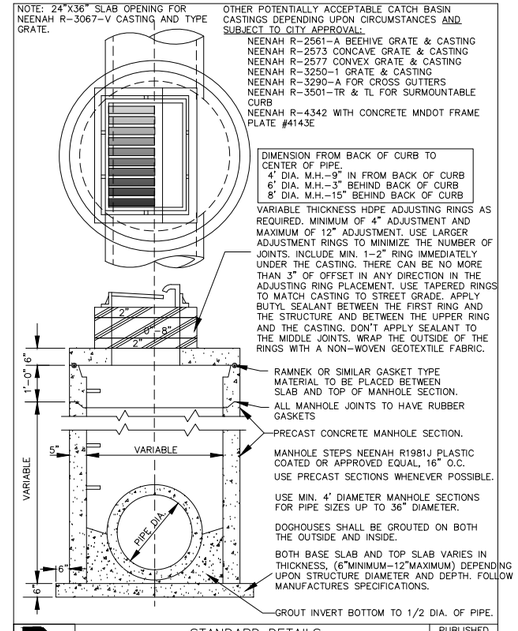

STANDARD DETAILS
PRECAST STORM SEWER CATCH BASIN MANHOLE WITH REINFORCED CONCRETE TOP SLAB
CITY OF PLYMOUTH

PUBLISHED 1-18
CITY PL. NO. ST-6
REVISED 1-18

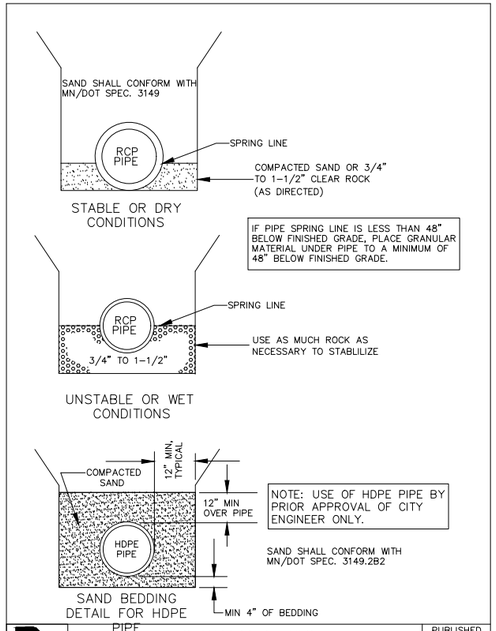

STANDARD DETAILS
STORM SEWER BEDDING
CITY OF PLYMOUTH

PUBLISHED 1-18
CITY PL. NO. ST-8
REVISED 3-12

NO	DATE	BY	CKD	APPR	REVISION

I hereby certify that this plan, specification or report was prepared by me or under my direct supervision and that I am a duly Licensed Professional Engineer under the laws of the State of Minnesota.

Signature: MICHAEL J. PAYNE
Date: 3-13-18 License#: 50484

City of Plymouth

PLYMOUTH, MINNESOTA
KILMER PARK STREET RECONSTRUCTION

DETAILS

STATE AID PROJECT NO.	DRAWN BY	DATE
----	M. PAYNE	2-18
COUNTY PROJECT NO.	DESIGNED BY	
----	M. PAYNE	2-18
CITY PROJECT NO.	CHECKED BY	
ST189001.001	M. PAYNE	2-18
	REVIEWED BY	
	J. RENNEBERG	2-18

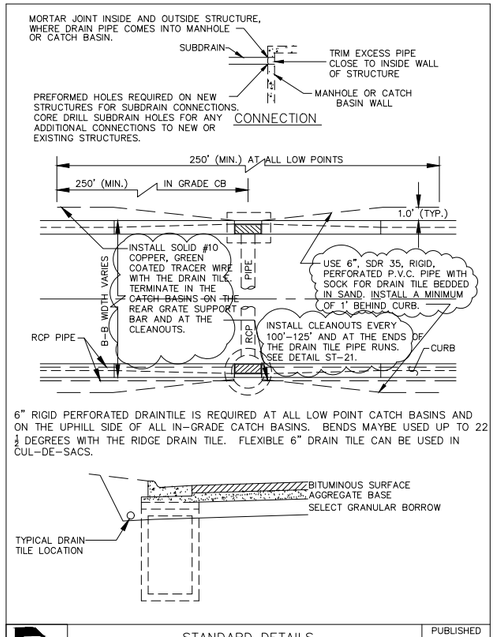

STANDARD DETAILS
SUBDRAIN DETAILS
CITY OF PLYMOUTH

PUBLISHED 1-18
CITY PL. NO. ST-9
REVISED 1-17

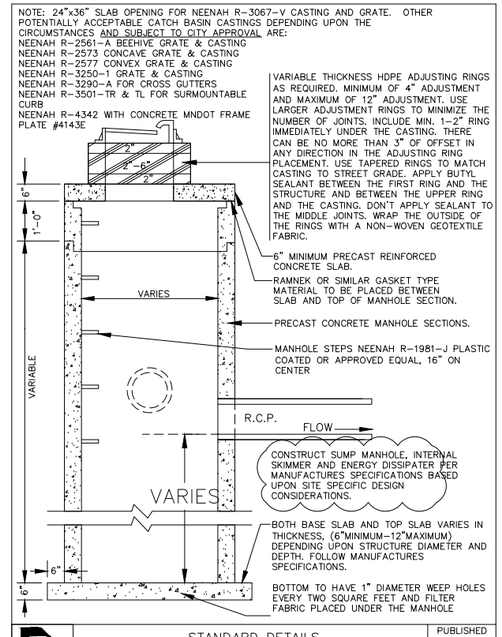

STANDARD DETAILS
SUMP CATCH BASIN MANHOLE
CITY OF PLYMOUTH

PUBLISHED 1-18
CITY PL. NO. ST-11
REVISED 3-16

NOTES:

1. DIG A 6"X6" TRENCH ALONG THE INTENDED FENCE LINE.
2. DRIVE ALL POSTS INTO THE GROUND AT THE DOWNHILL SIDE OF THE TRENCH.
3. WIRE FENCING PER HENNEPIN COUNTY CONSERVATION DISTRICT EROSION AND SEDIMENT CONTROL MANUAL. WIRE MESH MUST BE A MINIMUM OF 2" INTO THE GROUND AND NO MORE THAN 36" ABOVE THE ORIGINAL GROUND SURFACE.
4. LAY OUT SILT FENCE ON THE UPHILL SIDE ALONG THE FENCE LINE, AND BACK FILL.
5. WOOD POSTS MAY BE SPACED UP TO 4 FEET APART IF WIRE MESH IS NOT USED TO SUPPORT THE FABRIC. IF WIRE MESH IS USED TO SUPPORT THE FABRIC STEEL POSTS MAY BE SPACED UP TO 8 FEET APART.
6. REMOVE SILT FENCE AFTER TURF IS ESTABLISHED.

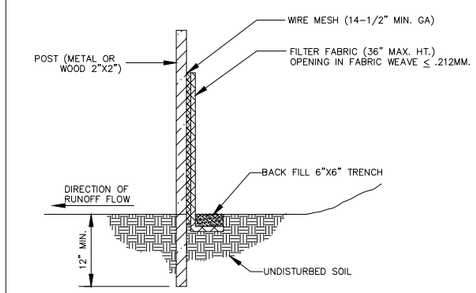

STANDARD DETAILS
SILT FENCE DETAIL
CITY OF PLYMOUTH

PUBLISHED 1-18
CITY PL. NO. ST-18
REVISED 3-16

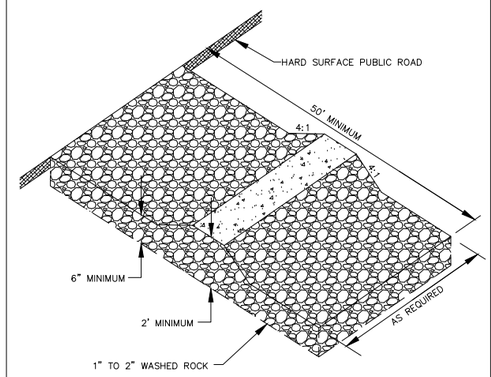

NOTES:

ROCK SIZE SHOULD BE 1" TO 2" IN SIZE SUCH AS MN/DOT CA-1 OR CA-2 COURSE AGGREGATE. (WASHED)

A GEOTEXTILE FABRIC MAY BE USED UNDER THE ROCK TO PREVENT MIGRATION OF THE UNDERLYING SOIL INTO THE STONE.

STANDARD DETAILS
ROCK ENTRANCE TO CONSTRUCTION SITE
CITY OF PLYMOUTH

PUBLISHED 1-18
CITY PL. NO. ST-19
REVISED 3-16

NOTE:

- 6" HUB WITH THREADED PVC CAP, DO NOT GLUE.
- COVER WITH FORD METER BOX A-32 CASTING OR APPROVED EQUAL. SET COVER FLUSH WITH FINISHED GRADE AND PLACE TEMPORARY STEEL FENCE POST NEXT TO EACH CLEAN OUT.
- TERMINATE SOLID #10 GREEN COATED TRACER WIRE UNDER THE METER BOX CASTING AND INSIDE THE CATCH BASINS.

NOTE:

- ENCLOSE LONG SWEEP BEND OR WYE IN AGGREGATE MATERIAL AS SHOWN.
- BENDS SHALL NOT BE GREATER THAN 22 1/2 DEGREES
- FLEXIBLY 6" DRAIN TILE MAYBE USED IN CIRCLES.

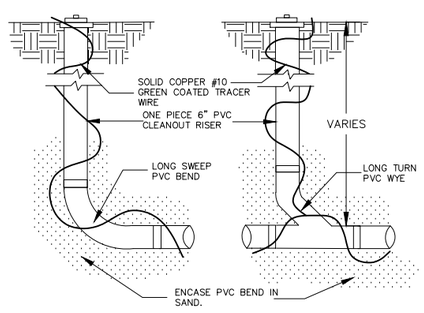

END OF LINE CLEANOUT

IN LINE CLEANOUT

STANDARD DETAILS
PVC STREET DRAIN TILE CLEANOUTS
CITY OF PLYMOUTH

PUBLISHED 1-18
CITY PL. NO. ST-21
REVISED 1-17

NOTE: B612 CURB MAY BE USED FOR PRIVATE DRIVES AND PARKING LOTS, BUT NOT PUBLIC STREETS

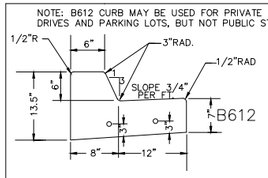

INSTALL AT ALL TRENCHES CROSSINGS OF THE CURB, 2 #4 EPOXY COATED REINFORCING RODS 20' IN LENGTH AND SHALL BE PLACED IN THE LOWER PORTION OF THE CURB

2 # 4 EPOXY COATED REINFORCING RODS EXTENDING FROM BOTH SIDES OF CATCH BASINS NO LESS THEN 10' IN LENGTH

CONTROL JOINTS SHALL CONFORM WITH MNDOT SPEC. 2531.3C. (10' SPACING) CONTROL JOINTS SHALL EXTEND TO BOTH THE FRONT AND BACKS OF THE CURB AND BE 2" DEEP.

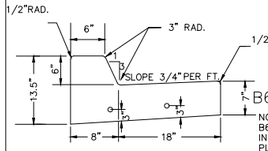

NOTE:
B618 CURB TO BE INSTALLED AT ALL INTERSECTION RADIUS, ALONG OUTLOTS, PARKS, PLAY LOTS, MAJOR ARTERIES, AND SUSTAINED STRETCHES WITH NO DRIVEWAYS.

GENERALLY SURMOUNTABLE CURB TO BE INSTALLED WHERE RESIDENTIAL DRIVEWAYS ARE PLANNED.

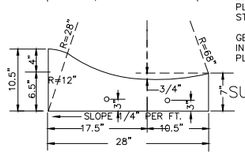

CURING COMPOUND SHALL BE APPLIED IMMEDIATELY AFTER FINISHING AND TO ALL EXPOSED SURFACES INCLUDING THE FRONT AND BACK OF THE CURBS. COVERAGE SHALL BE UNIFORM AND SHALL MATCH THE APPEARANCE OF A WHITE SHEET OF PAPER.

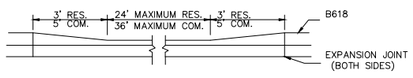

CURB CUT DETAIL

STANDARD DETAILS
STANDARD CURB DETAILS
CITY OF PLYMOUTH

PUBLISHED 1-18
CITY PL. NO. STRT-1
REVISED 3-14

CONCRETE SLAB 6" MIN. THICKNESS, REINFORCED WITH #4 EPOXY COATED REINFORCING RODS PLACED 10" ON CENTER IN BOTH DIRECTIONS THROUGH OUT THE SLAB. THEY SHALL BE PLACED TO BE 3" CLEAR OF SLAB EDGES. SLAB SHALL BE PLACED ON 6" OF COMPACTED CL 5 AGGREGATE BASE.

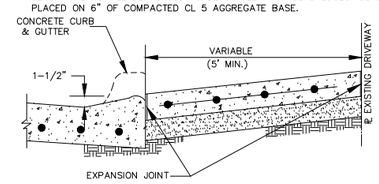

SECTION A-A

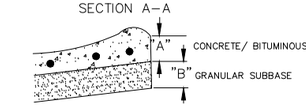

	CONCRETE	BITUMINOUS
"A"	6"	3"
"B"	6"	6"
"C"	3"	3"

SECTION B-B

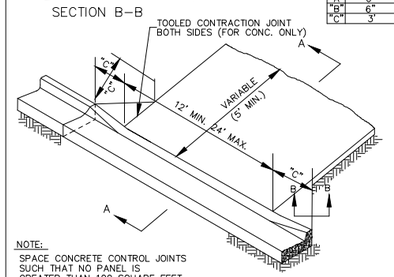

NOTE:
SPACE CONCRETE CONTROL JOINTS SUCH THAT NO PANEL IS GREATER THAN 100 SQUARE FEET.

STANDARD DETAILS
RESIDENTIAL DRIVEWAY DETAIL
CITY OF PLYMOUTH

PUBLISHED 1-18
CITY PL. NO. STRT-13
REVISED 3-13

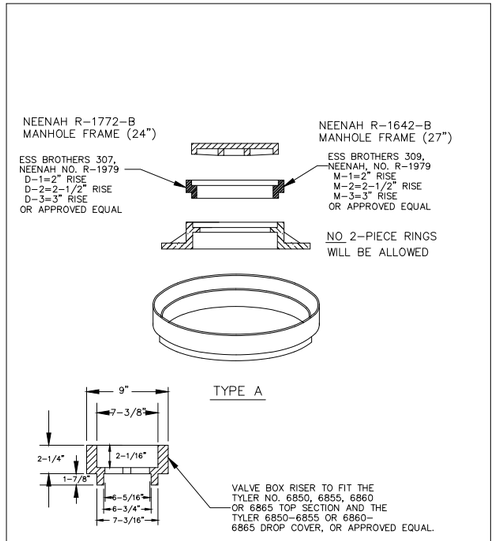

STANDARD DETAILS
RISERS FOR EXTENSION OF GATE VALVES & MANHOLES
CITY OF PLYMOUTH

PUBLISHED 1-18
CITY PL. NO. STRT-29
REVISED 3-11

NO	DATE	BY	CKD	APPR	REVISION

I hereby certify that this plan, specification or report was prepared by me or under my direct supervision and that I am a duly Licensed Professional Engineer under the laws of the State of Minnesota.

Signature: MICHAEL J. PAYNE

Date: 3-13-18 License#: 50484

City of Plymouth

PLYMOUTH, MINNESOTA
KILMER PARK STREET RECONSTRUCTION

DETAILS

STATE AID PROJECT NO.	DRAWN BY M. PAYNE	DATE 2-18
COUNTY PROJECT NO.	DESIGNED BY M. PAYNE	2-18
CITY PROJECT NO. ST189001.001	CHECKED BY M. PAYNE	2-18
	REVIEWED BY J. RENNEBERG	2-18

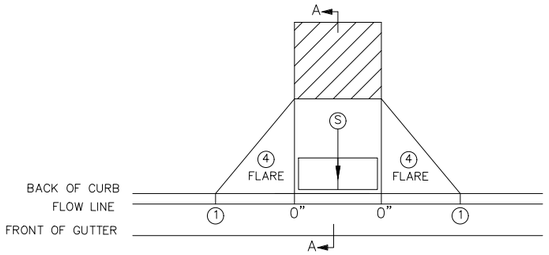

PERPENDICULAR

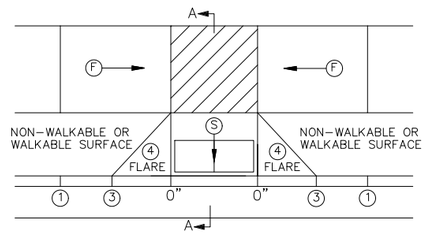

TIERED PERPENDICULAR

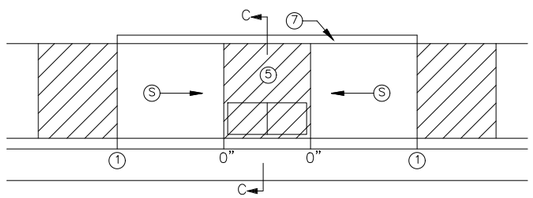

PARALLEL

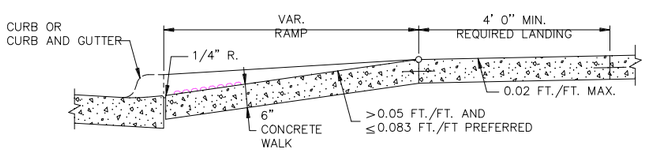

SECTION A–A

PERPENDICULAR/TIERED/DIAGONAL

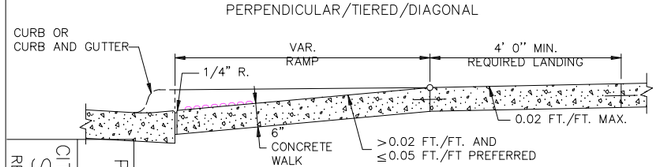

SECTION B–B

FAN

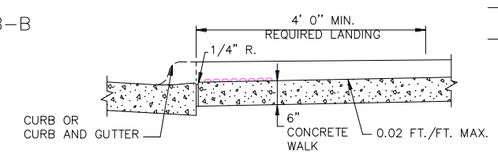

SECTION C–C

PARALLEL/DEPRESSED CORNER

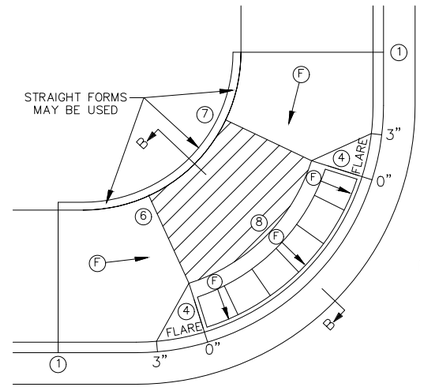

FAN 10

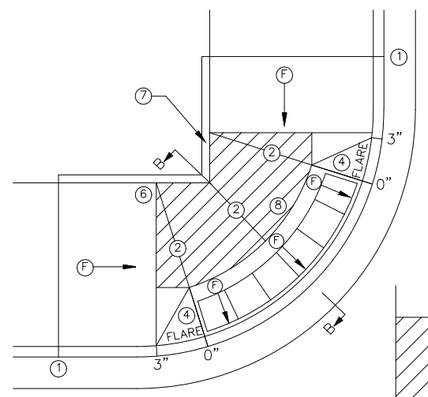

MODIFIED FAN 10

USED WHEN RIGHT–OF–WAY IS CONSTRAINED

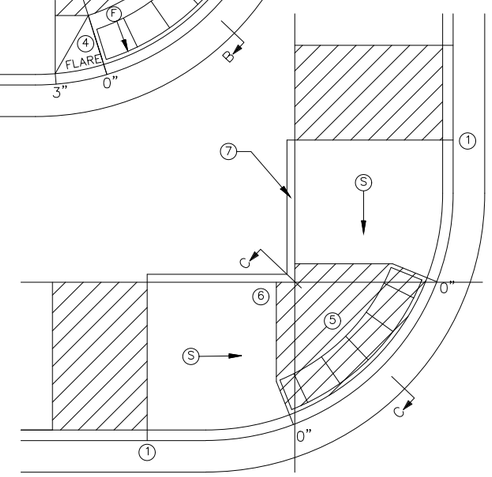

DEPRESSED CORNER

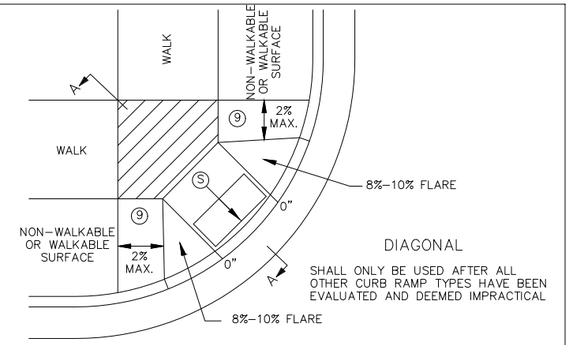

DIAGONAL

SHALL ONLY BE USED AFTER ALL OTHER CURB RAMP TYPES HAVE BEEN EVALUATED AND DEEMED IMPRACTICAL

NOTES:

LANDINGS SHALL BE LOCATED ANYWHERE THE PEDESTRIAN ACCESS ROUTE (PAR) CHANGES DIRECTION, AT THE TOP OF RAMPS THAT HAVE RUNNING SLOPES GREATER THAN 5.0%, AND IF THE APPROACHING WALK IS INVERSE GRADE GREATER THAN 2%.

INITIAL CURB RAMP LANDINGS SHALL BE CONSTRUCTED WITHIN 15' FROM THE BACK OF CURB, WITH 6' FROM THE BACK OF CURB BEING THE PREFERRED DISTANCE, ONLY APPLICABLE WHEN THE INITIAL RAMP RUNNING SLOPE IS OVER 5.0%.

SECONDARY CURB RAMP LANDINGS ARE REQUIRED FOR EVERY 30" OF VERTICAL RISE WHEN THE LONGITUDINAL RUNNING SLOPE IS GREATER THAN 5.0%.

CONTRACTION JOINTS SHALL BE CONSTRUCTED ALONG ALL GRADE BREAKS WITHIN THE PAR. 1/4" DEEP VISUAL JOINTS SHALL BE USED AT THE TOPS OF CONCRETE FLARES ADJACENT TO WALKABLE SURFACES.

ALL GRADE BREAKS WITHIN THE PAR SHALL BE PERPENDICULAR TO THE PATH OF TRAVEL. THUS BOTH SIDES OF A SLOPED WALKING SURFACE MUST BE EQUAL LENGTH. (EXCEPT AS STATED IN 6 BELOW.

TO ENSURE INITIAL RAMPS AND INITIAL LANDINGS ARE PROPERLY CONSTRUCTED, LANDINGS SHALL BE CAST SEPARATELY. FOLLOW SIDEWALK REINFORCEMENT DETAILS ON SHEET 6 AND THE ADA SPECIAL PROVISIONS – PROSECUTION OF WORK (ADA).

TOP OF CURB SHALL MATCH PROPOSED ADJACENT WALK GRADE.

WHEN THE BOULEVARD IS 4' WIDE OR LESS, THE TOP OF CURB TAPER SHALL MATCH THE RAMP SLOPES TO REDUCE NEGATIVE BOULEVARD SLOPES FROM THE TOP BACK OF CURB TO THE PAR.

ALL RAMP TYPES SHOULD HAVE A MINIMUM 3' LONG RAMP LENGTH.

4' MINIMUM WIDTH OF DETECTABLE WARNING IS REQUIRED FOR ALL RAMPS. DETECTABLE WARNINGS SHALL CONTINUOUSLY EXTEND FOR A MIN. OF 24" IN THE PATH OF TRAVEL. DETECTABLE WARNING TO COVER ENTIRE WIDTH OF SHARED–USE PATHS AND THE ENTIRE PAR WIDTH OF THE WALK. DETECTABLE WARNING SHOULD BE 6" LESS THAN THE PAR/TRAIL WIDTH. ARC LENGTH OF RADIAL DETECTABLE WARNINGS SHOULD NOT BE GREATER THAN 20 FEET.

RECTANGULAR DETECTABLE WARNINGS SHALL BE SETBACK 3" FROM THE BACK OF CURB. RADIAL DETECTABLE WARNINGS SHALL BE SETBACK 3" MINIMUM TO 6" MAXIMUM FROM THE BACK OF CURB.

1. MATCH FULL HEIGHT CURB.
2. 4' MINIMUM DEPTH LANDING REQUIRED ACROSS TOP OF RAMP.
3. 3" HIGH CURB WHEN USING A 3' LONG RAMP, 4" HIGH CURB WHEN USING A 4' LONG RAMP.
4. SEE SHEET 4 OF 6, TYPICAL SIDE TREATMENT OPTIONS, FOR DETAILS ON FLARES AND RETURNED CURBS, WHEN INITIAL LANDING IS AT FULL CURB HEIGHT.
5. DETECTABLE WARNINGS MAY BE PART OF THE 4' X 4' MIN. LANDING AREA IF IT IS NOT FEASIBLE TO CONSTRUCT THE LANDING OUTSIDE OF THE DETECTABLE WARNING AREA.
6. THE GRADE BREAK SHALL BE PERPENDICULAR TO THE BACK OF WALK. THIS WILL ENSURE THAT THE GRADE BREAK IS PERPENDICULAR TO THE DIRECTION OF TRAVEL. (TYPICAL FOR ALL)
7. WHEN ADJACENT TO GRASS, GRADING SHALL ALWAYS BE USED WHEN FEASIBLE. V CURB, IF USED, SHALL BE PLACED OUTSIDE THE SIDEWALK LIMITS WHEN RIGHT OF WAY ALLOWS. WHEN ADJACENT TO PARKING LOTS, CONCRETE OR BITUMINOUS TAPERS SHOULD BE USED OVER V CURB TO REDUCE TRIPPING HAZARDS AND FACILITATE SNOW & ICE REMOVAL.
8. A 7' MIN TOP RADIUS GRADE BREAK REQUIRED TO BE CONSTRUCTIBLE.
9. PAVE FULL WALK WIDTH.
10. "S" SLOPES ON FANS SHALL ONLY BE USED WHEN ALL OTHER FEASIBLE OPTIONS HAVE BEEN EVALUATED AND DEEMED IMPRACTICAL.

LEGEND

THESE LONGITUDINAL SLOPE RANGES SHALL BE THE STARTING POINT. IF SITE CONDITIONS WARRANT, LONGITUDINAL SLOPES UP TO 8.3% OR FLATTER ARE ALLOWED.

- S — INDICATES PEDESTRIAN RAMP – SLOPE SHALL BE BETWEEN 5.0% MINIMUM AND 8.3% MAXIMUM IN THE DIRECTION SHOWN AND THE CROSS SLOPE SHALL NOT EXCEED 2.0%.
- F — INDICATES PEDESTRIAN RAMP – SLOPE SHALL BE GREATER THAN 2.0% AND LESS THAN 5.0% IN THE DIRECTION SHOWN AND CROSS SLOPE SHALL NOT EXCEED 2.0%.
- LANDING AREA – 4' X 4' MIN. (5' X 5' MIN. PREFERRED) DIMENSIONS AND MAX 2.0% SLOPE IN ALL DIRECTIONS. LANDING SHALL BE FULL WIDTH OF INCOMING PARS.
- X" — CURB HEIGHT

CITY PL. NO. STRT–3
REVISED 1–18
PUBLISHED 1–18

REVISION:

APPROVED: JANUARY 23, 2017
OPERATIONS ENGINEER

MINNESOTA DEPARTMENT OF TRANSPORTATION

STATE DESIGN ENGINEER

REVISED:

APPROVED: 1–23–2017

PEDESTRIAN CURB RAMP DETAILS

STANDARD PLAN 5–297.250 | 1 OF 6

NO	DATE	BY	CKD	APPR	REVISION

I hereby certify that this plan, specification or report was prepared by me or under my direct supervision and that I am a duly Licensed Professional Engineer under the laws of the State of Minnesota.

Signature: MICHAEL J. PAYNE

Date: 3–13–18 License#: 50484

City of Plymouth

PLYMOUTH, MINNESOTA
KILMER PARK STREET RECONSTRUCTION

DETAILS

STATE AID PROJECT NO.	DRAWN BY	DATE
----	M. PAYNE	2–18
COUNTY PROJECT NO.	DESIGNED BY	
----	M. PAYNE	2–18
CITY PROJECT NO.	CHECKED BY	
ST189001.001	M. PAYNE	2–18
	REVIEWED BY	
	J. RENNEBERG	2–18

SHEET 9 OF 106

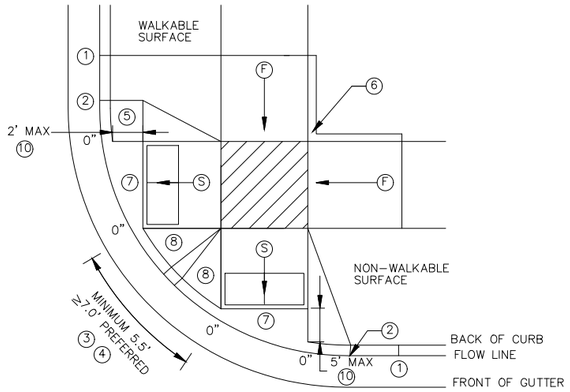

COMBINED DIRECTIONAL (9)

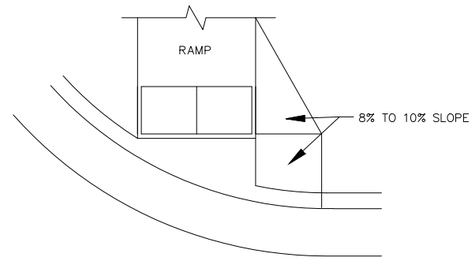

DIRECTIONAL RAMP WALKABLE FLARE

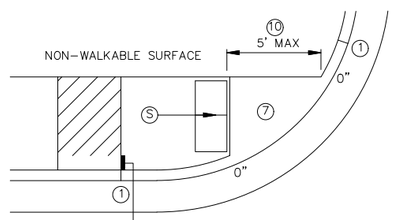

IF NON-CONCRETE BLVD. IS CONSTRUCTED AND ISLESS THAN 2' IN WIDTH AT TOP OF CURB TRANSITION, PAVE CONCRETE RAMP WIDTH TO ADJACENT BACK OF CURB.

STANDARD ONE-WAY DIRECTIONAL (9)

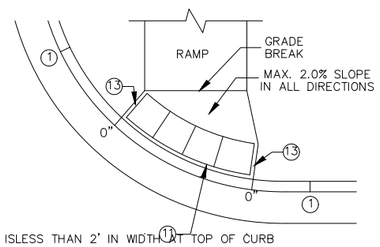

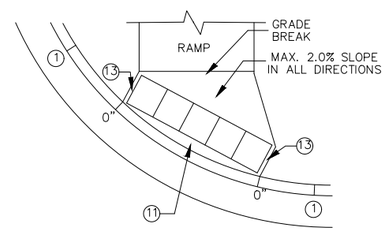

DETECTABLE WARNING PLACEMENT WHEN SETBACK CRITERIA IS EXCEEDED (12)

ONE-WAY DIRECTIONAL WITH DETECTABLE WARNING AT BACK OF CURB

NOTES:

LANDINGS SHALL BE LOCATED ANYWHERE THE PEDESTRIAN ACCESS ROUTE (PAR) CHANGES DIRECTION, AT THE TOP OF RAMPS THAT HAVE RUNNING SLOPES GREATER THAN 5.0%, AND IF THE APPROACHING WALK IS INVERSE GRADE.

INITIAL CURB RAMP LANDINGS SHALL BE CONSTRUCTED WITHIN 15' FROM THE BACK OF CURB, WITH 6' FROM THE BACK OF CURB BEING THE PREFERRED DISTANCE, ONLY APPLICABLE WHEN THE INITIAL RAMP RUNNING SLOPE IS OVER 5.0%.

SECONDARY CURB RAMP LANDINGS ARE REQUIRED FOR EVERY 30" OF VERTICAL RISE WHEN THE LONGITUDINAL SLOPE IS GREATER THAN 5.0%.

CONTRACTION JOINTS SHALL BE CONSTRUCTED ALONG ALL GRADE BREAKS WITHIN THE PAR. 1/4" DEEP VISUAL JOINTS SHALL BE USED AT THE TOP GRADE BREAK OF CONCRETE FLARES ADJACENT TO WALKABLE SURFACES.

ALL GRADE BREAKS WITHIN THE PAR SHALL BE PERPENDICULAR TO THE PATH OF TRAVEL. THUS BOTH SIDES OF A SLOPED WALKING SURFACE MUST BE EQUAL LENGTH.

TO ENSURE INITIAL RAMPS AND INITIAL LANDINGS ARE PROPERLY CONSTRUCTED, LANDINGS SHALL BE CAST SEPARATELY. FOLLOW SIDEWALK REINFORCEMENT DETAILS ON SHEET 6 AND THE ADA SPECIAL PROVISION (PROSECUTION OF WORK).

TOP OF CURB SHALL MATCH PROPOSED ADJACENT WALK GRADE.

WHEN THE BOULEVARD IS 4' WIDE OR LESS, THE TOP OF CURB TAPER SHALL MATCH THE RAMP SLOPES TO REDUCE NEGATIVE BOULEVARD SLOPES FROM THE TOP BACK OF CURB TO THE PAR.

ALL RAMP TYPES SHOULD HAVE A MINIMUM 3' LONG RAMP LENGTH.

4' MINIMUM WIDTH OF DETECTABLE WARNING IS REQUIRED FOR ALL RAMPS. DETECTABLE WARNINGS SHALL CONTINUOUSLY EXTEND FOR A MIN. OF 24" IN THE PATH OF TRAVEL. DETECTABLE WARNING TO COVER ENTIRE WIDTH OF SHARED-USE PATH AND THE ENTIRE PAR WIDTH OF THE WALK. DETECTABLE WARNING SHOULD BE 6" LESS THAN THE PAR/PATH WIDTH. ARC LENGTH OF RADIAL DETECTABLE WARNINGS SHOULD NOT BE GREATER THAN 20 FEET.

RADIAL DETECTABLE WARNINGS SHALL BE SETBACK 3" MINIMUM TO 6" MAXIMUM FROM THE BACK OF CURB. SEE NOTES (10) & (11) FOR INFORMATION REGARDING RECTANGULAR DETECTABLE WARNING PLACEMENT.

(1) MATCH FULL CURB HEIGHT.

(2) 3" HIGH CURB WHEN USING A 3' LONG RAMP
4" HIGH CURB WHEN USING A 4' LONG RAMP.

(3) 3" MINIMUM CURB HEIGHT (5.5' MIN. DISTANCE REQUIRED BETWEEN DOMES)
4" PREFERRED (7' MIN. DISTANCE REQUIRED BETWEEN DOMES).

(4) THE "BUMP" IN BETWEEN THE RAMPS SHOULD NOT BE IN THE PATH OF TRAVEL FOR COMBINED DIRECTIONAL RAMPS. IF THIS OCCURS MODIFY THE RAMP LOCATION OR SWITCH RAMP TO A FAN/DEPRESSED CORNER.

(5) WHEN USING CONCRETE PAVED FLARES ON THE OUTSIDE OF DIRECTIONAL RAMPS, AND ADJACENT TO A WALKABLE SURFACE, DIRECTIONAL RAMP FLARES SHOULD BE USED. SEE THE DETAIL ON THIS SHEET.

(6) GRADING SHALL ALWAYS BE USED WHEN FEASIBLE. V CURB, IF USED, SHALL BE PLACED OUTSIDE THE SIDEWALK LIMITS WHEN RIGHT OF WAY ALLOWS. WHEN ADJACENT TO PARKING LOTS, CONCRETE OR BITUMINOUS TAPERS SHOULD BE USED OVER V CURB TO REDUCE TRIPPING HAZARDS AND FACILITATE SNOW & ICE REMOVAL.

(7) MAX. 2.0% SLOPE IN ALL DIRECTIONS IN FRONT OF GRADE BREAK AND DRAIN TO FLOW LINE. SHALL BE CONSTRUCTED INTEGRAL WITH CURB AND GUTTER.

(8) 8% TO 10% WALKABLE FLARE.

(9) PLACE DOMES AT THE BACK OF CURB WHEN ALLOWABLE SETBACK CRITERIA IS EXCEEDED.

(10) FRONT EDGE OF DETECTABLE WARNING SHALL BE SET BACK 2' MAXIMUM WHEN ADJACENT TO WALKABLE SURFACE, AND 5' MAXIMUM WHEN ADJACENT TO NON-WALKABLE SURFACE WITH ONE CORNER SET 3" FROM BACK OF CURB. A WALKABLE SURFACE IS DEFINED AS A PAVED SURFACE ADJACENT TO A CURB RAMP WITHOUT RAISED OBSTACLES THAT COULD MISTAKENLY BE TRAVERSED BY A USER WHO IS VISUALLY IMPAIRED.

(11) RECTANGULAR DETECTABLE WARNINGS MAY BE SETBACK UP TO 9" FROM THE BACK OF CURB WITH CORNERS SET 3" FROM BACK OF CURB. IF 9" SETBACK IS EXCEEDED USE RADIAL DETECTABLE WARNINGS.

(12) FOR DIRECTIONAL RAMPS WITH THE DETECTABLE WARNINGS PLACED AT THE BACK OF CURB, THE DETECTABLE WARNINGS SHALL COVER THE ENTIRE WIDTH OF THE WALK/PATH. THIS ENSURES A DETECTABLE EDGE AND HELPS ELIMINATE THE CURB TAPER OBSTRUCTING THE PATH OF PEDESTRIAN TRAVEL.

(13) THE CONCRETE WALK SHALL BE FORMED AND CONSTRUCTED PERPENDICULAR TO THE BACK OF CURB. MAINTAIN 3" BETWEEN EDGE OF DOMES AND EDGE OF CONCRETE.

(14) TO BE USED FOR ALL DIRECTIONAL RAMPS, EXCEPT WHERE DOMES ARE PLACED ALONG THE BACK OF CURB.

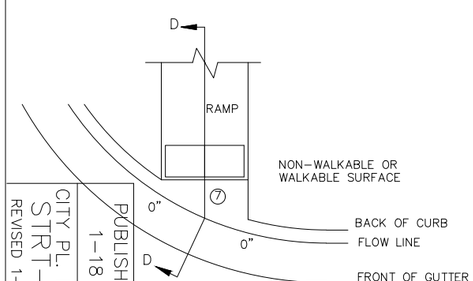

CURB FOR DIRECTIONAL RAMPS (14)

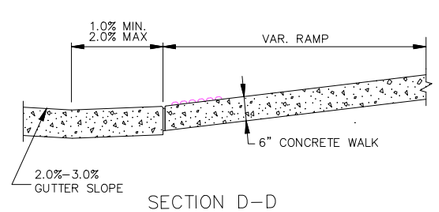

SECTION D-D

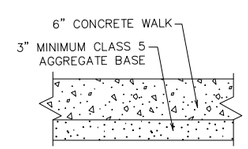

TYPICAL SIDEWALK SECTION WITHIN INTERSECTION CORNER

LEGEND

THESE LONGITUDINAL SLOPE RANGES SHALL BE THE STARTING POINT. IF SITE CONDITIONS WARRANT, LONGITUDINAL SLOPES UP TO 8.3% OR FLATTER ARE ALLOWED.

(S) INDICATES PEDESTRIAN RAMP – SLOPE SHALL BE BETWEEN 5.0% MINIMUM AND 8.3% MAXIMUM IN THE DIRECTION SHOWN AND THE CROSS SLOPE SHALL NOT EXCEED 2.0%.

(F) INDICATES PEDESTRIAN RAMP – SLOPE SHALL BE GREATER THAN 2.0% AND LESS THAN 5.0% IN THE DIRECTION SHOWN AND CROSS SLOPE SHALL NOT EXCEED 2.0%.

LANDING AREA – 4' X 4' MIN. (5' X 5' MIN. PREFERRED) DIMENSIONS AND MAX 2.0% SLOPE IN ALL DIRECTIONS. LANDING SHALL BE FULL WIDTH OF INCOMING PARS.

X" CURB HEIGHT

CITY PL. NO. STRT-4
REVISED 1-18
PUBLISHED 1-18

REVISION:
APPROVED: JANUARY 23, 2017
OPERATIONS ENGINEER

MINNESOTA DEPARTMENT OF TRANSPORTATION
STATE DESIGN ENGINEER
REVISED:
APPROVED: 1-23-2017

PEDESTRIAN CURB RAMP DETAILS

STANDARD PLAN 5-297.250 | 2 OF 6

NO	DATE	BY	CKD	APPR	REVISION

I hereby certify that this plan, specification or report was prepared by me or under my direct supervision and that I am a duly Licensed Professional Engineer under the laws of the State of Minnesota.
Signature: MICHAEL J. PAYNE
Date: 3-13-18 License#: 50484

City of Plymouth

PLYMOUTH, MINNESOTA
KILMER PARK STREET RECONSTRUCTION

DETAILS

STATE AID PROJECT NO.	DRAWN BY	DATE
----	M. PAYNE	2-18
COUNTY PROJECT NO.	DESIGNED BY M. PAYNE	2-18
----	CHECKED BY M. PAYNE	2-18
CITY PROJECT NO. ST189001.001	REVIEWED BY J. RENNEBERG	2-18

SHEET 10 OF 106

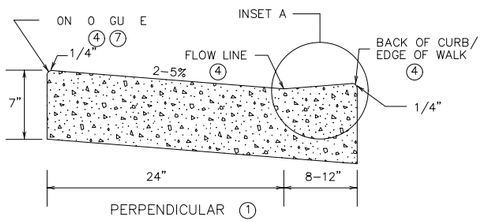

PERPENDICULAR 1

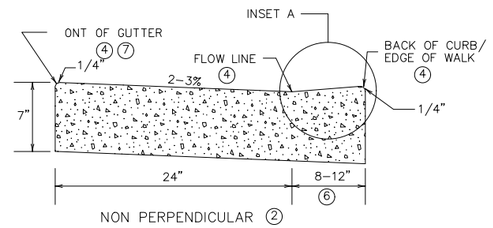

NON PERPENDICULAR 2

PEDESTRIAN ACCESS ROUTE CURB & GUTTER DETAIL

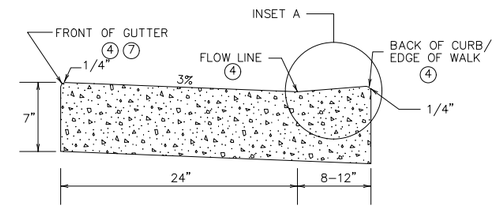

FOR CURB MACHINE PLACEMENT AROUND RADIUS 3
(REGARDLESS OF RAMP TYPE)

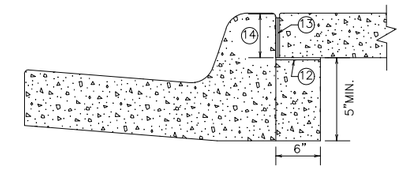

OPTIONAL SILL CURB WHEN SIDEWALK IS AT BACK OF CURB

CONCRETE SILL TO BE USED ONLY WHEN SPECIFIED IN THE PLAN.

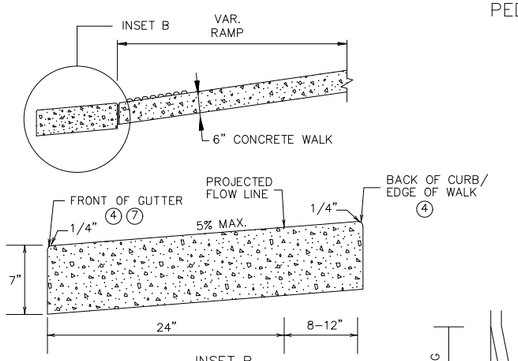

INSET B
OUTFLOW GUTTER 8

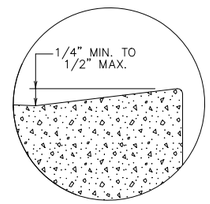

INSET A

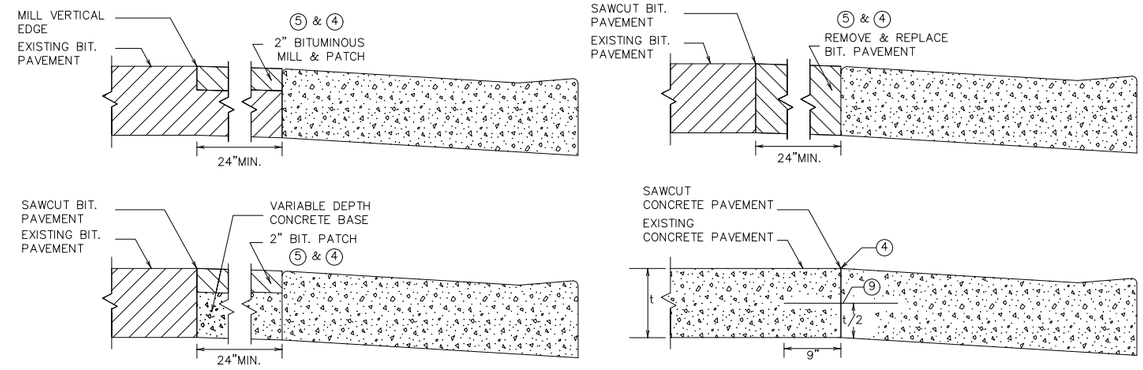

ONLY ALLOWED PER ENGINEER'S APPROVAL

PAVEMENT TREATMENT OPTIONS IN FRONT OF CURB & GUTTER

FOR USE ON CURB RAMP RETROFITS

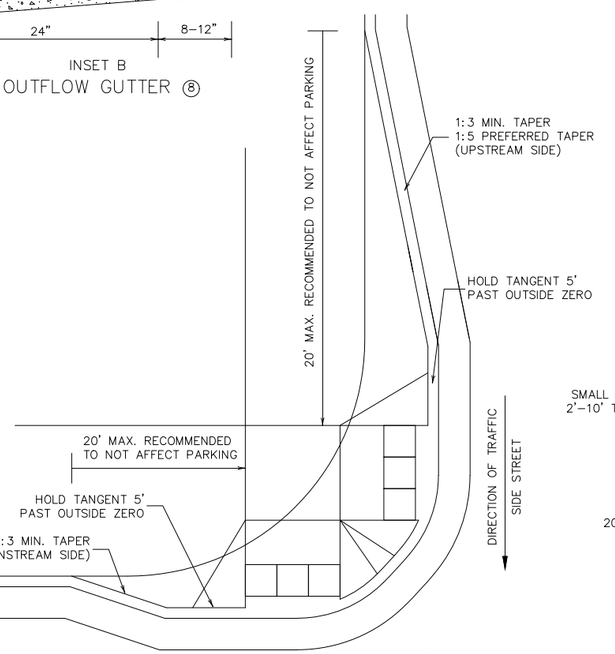

ADA CURB EXTENSION WITH COMPOUND RADIUS (BUMP OUT) 11

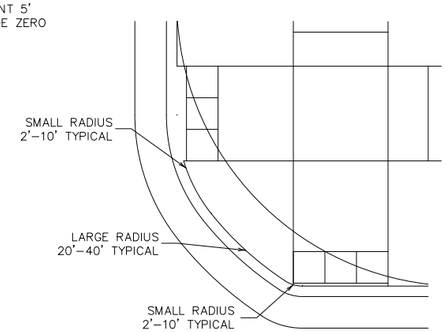

COMBINED DIRECTIONAL 10
(COMPOUND RADIUS)

NOTES:

POSITIVE FLOW LINE DRAINAGE SHALL BE MAINTAINED THROUGH THE PEDESTRIAN ACCESS ROUTE (PAR) AT A 2% MAXIMUM.
NO PONDING SHALL BE PRESENT IN THE PAR.
ANY VERTICAL LIP THAT OCCURS AT THE FLOW LINE SHALL NOT BE GREATER THAN 1/4 INCH.

1. FOR USE AT CURB CUTS WHERE THE PEDESTRIAN'S PATH OF TRAVEL IS ASSUMED PERPENDICULAR TO THE GUTTER FLOW LINE. RAMP TYPES INCLUDE: PERPENDICULAR, TIERED PERPENDICULAR, PARALLEL, AND DIAGONAL RAMPS.
2. FOR USE AT CURB RAMPS WHERE THE PEDESTRIAN'S PATH OF TRAVEL IS ASSUMED NON PERPENDICULAR TO THE GUTTER FLOW LINE. RAMP TYPES INCLUDE: FANS & DEPRESSED CORNERS.
3. BEGIN GUTTER SLOPE TRANSITION 10' OUTSIDE OF ALL CURB RAMPS.
4. THERE SHALL BE NO VERTICAL DISCONTINUITIES GREATER THAN 1/4".
5. ELEVATION CHANGE TAKES PLACE FROM THE EXISTING TO NEW FRONT OF GUTTER. PATCH IS USED TO MATCH THE NEW GUTTER FACE INTO THE EXISTING ROADWAY.
6. VARIABLE WIDTH FOR DIRECTIONAL CURB APPLICATIONS. SEE SHEET 2 FOR DIRECTIONAL CURB SLOPE REQUIREMENTS.
7. TOP FRONT OF GUTTER SHALL BE CONSTRUCTED FLUSH WITH PROPOSED ADJACENT PAVEMENT ELEVATION. TOP 1.5" OF THE GUTTER FACE MUST BE A FORMED EDGE. PAR GUTTER SHALL NOT BE OVERLAID.
8. SHOULD BE USED AT VERTICALLY CONSTRAINED AREAS WHEN AT A DRAINAGE HIGH POINT OR SUPER ELEVATED ROADWAY SEGMENTS.
9. DRILL AND GROUT NO. 4 EPOXY–COATED 18" LONG TIE BARS AT 30" CENTER TO CENTER INTO EXISTING CONCRETE PAVEMENT 1' MINIMUM FROM ALL JOINTS.
10. HELPS PROVIDE TWO SEPARATE RAMPS, REDUCES THE DOME SETBACK LENGTH AND MINIMIZES DIRECTIONAL CURB. THIS RADIUS DESIGN CLOSELY FOLLOWS THE TURNING VEHICLE PATH WHILE OPTIMIZING CURB RAMP LENGTH.
11. CURB EXTENSIONS SHOULD BE USED IN VERTICALLY CONSTRAINED AREAS, USUALLY IN DOWNTOWN ROADWAY SEGMENTS WHERE ON–STREET PARKING IS AVAILABLE. CURB EXTENSIONS SHOULD BE CONSIDERED FOR APS INTERSECTIONS WHERE SPACE IS LIMITED. PUSH BUTTONS MUST MEET APS CRITERIA AS DESCRIBED IN THE PUSH BUTTON LOCATION DETAIL SHEET.
12. PLACE BOND BREAKER BETWEEN WALK AND TOP OF SILL.
13. 1/2" PREFORMED JOINT FILLER PER MNDOT SPEC. 3702.
14. DIMENSION TO BE SAME AS SIDEWALK THICKNESS, 4" MIN.

PUBLISHED 1–18
CITY PL. NO. STRT–5
REVISED 1–18

REVISION:

APPROVED: JANUARY 23, 2017
OPERATIONS ENGINEER

MINNESOTA DEPARTMENT OF TRANSPORTATION

REVISED:

APPROVED: 1–23–2017
STATE DESIGN ENGINEER

PEDESTRIAN CURB RAMP DETAILS

STANDARD PLAN 5–297.250 | 3 OF 6

NO	DATE	BY	CKD	APPR	REVISION

I hereby certify that this plan, specification or report was prepared by me or under my direct supervision and that I am a duly Licensed Professional Engineer under the laws of the State of Minnesota.

Signature: MICHAEL J. PAYNE

Date: 3–13–18 License#: 50484

City of Plymouth

PLYMOUTH, MINNESOTA
KILMER PARK STREET
RECONSTRUCTION

DETAILS

STATE AID PROJECT NO.	DRAWN BY	DATE
----	M. PAYNE	2–18
COUNTY PROJECT NO.	DESIGNED BY	
----	M. PAYNE	2–18
	CHECKED BY	
	M. PAYNE	2–18
CITY PROJECT NO.	REVIEWED BY	
ST189001.001	J. RENNEBERG	2–18

SHEET 10 OF 106

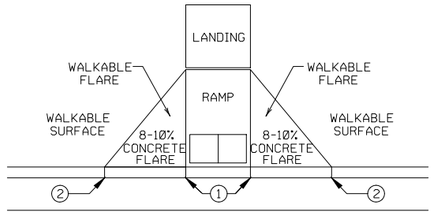

PAVED FLARES
ADJACENT TO WALKABLE SURFACE

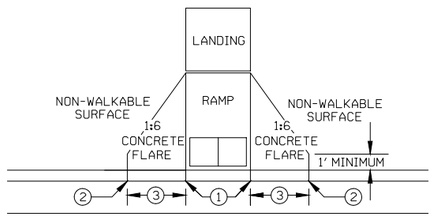

PAVED FLARES
ADJACENT TO NON-WALKABLE SURFACE

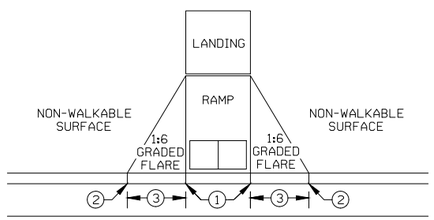

GRADED FLARES

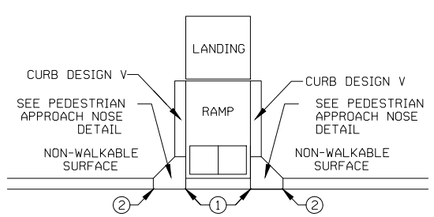

RETURNED CURB ⑤

TYPICAL SIDE TREATMENT OPTIONS ④ ⑪

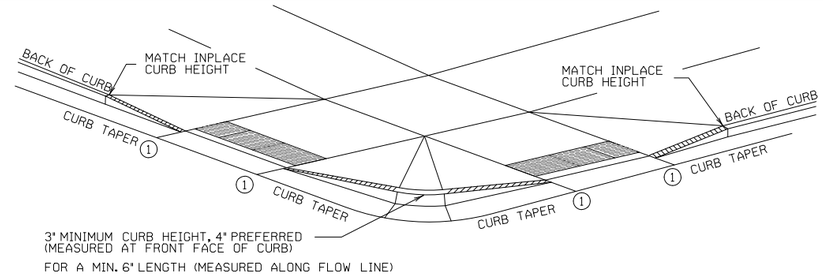

DETECTABLE EDGE WITH ⑧
CURB AND GUTTER

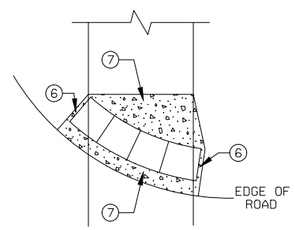

RADIAL DETECTABLE WARNING

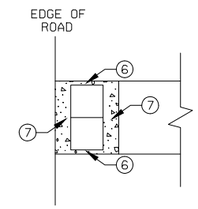

RECTANGULAR DETECTABLE WARNING

DETECTABLE EDGE WITHOUT CURB AND GUTTER

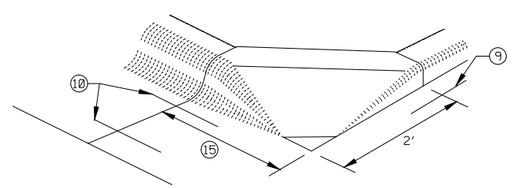

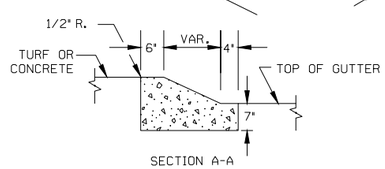

SECTION A-A

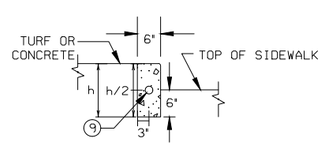

SECTION B-B

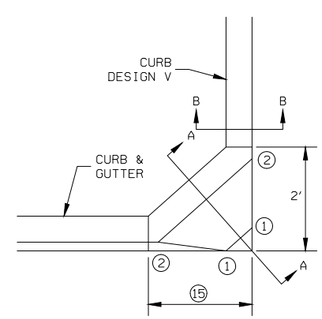

PEDESTRIAN APPROACH
NOSE DETAIL
(FOR RETURNED CURB
SIDE TREATMENT)

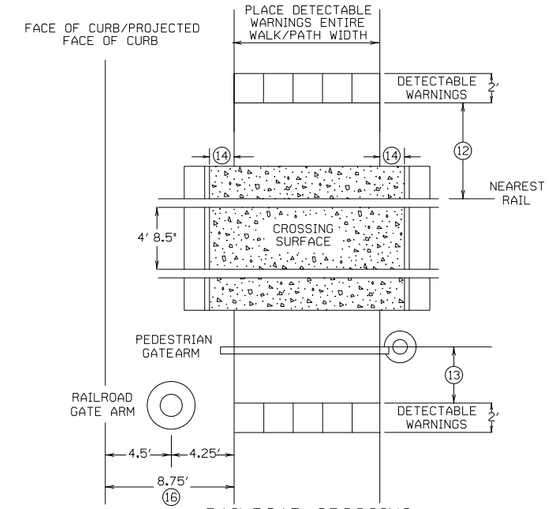

RAILROAD CROSSING
PLAN VIEW

NOTES:

SEE STANDARD PLATE 7038 AND THIS SHEET FOR ADDITIONAL DETAILS ON DETECTABLE WARNING.

A WALKABLE SURFACE IS DEFINED AS A PAVED SURFACE ADJACENT TO A CURB RAMP WITHOUT RAISED OBSTACLES THAT COULD MISTAKENLY BE TRAVERSED BY A USER WHO IS VISUALLY IMPAIRED.

CONCRETE FLARE LENGTHS ADJACENT TO NON-WALKABLE SURFACES SHOULD BE LESS THAN 8' LONG MEASURED ALONG THE RAMPS FROM THE BACK OF CURB.

① 0" CURB HEIGHT.

② FULL CURB HEIGHT.

③ 2' FOR 4" HIGH CURB AND 3' FOR 6" HIGH CURB.

④ SIDE TREATMENTS ARE APPLICABLE TO ALL RAMP TYPES AND SHOULD BE IMPLEMENTED AS NEEDED AS FIELD CONDITIONS DICTATE. THE ENGINEER SHALL DETERMINE THE RAMP SIDE TREATMENTS BASED ON MAINTENANCE OF BOTH ROADWAY AND SIDEWALK, ADJACENT PROPERTY CONSIDERATIONS, AND MITIGATING CONSTRUCTION IMPACTS.

⑤ TYPICALLY USED FOR MEDIANS AND ISLANDS.

⑥ WHEN NO CONCRETE FLARES ARE PROPOSED, THE CONCRETE WALK SHALL BE FORMED AND CONSTRUCTED PERPENDICULAR TO THE EDGE OF ROADWAY. MAINTAIN 3" MAX. BETWEEN EDGE OF DOMES AND EDGE OF CONCRETE.

⑦ IF NO CURB AND GUTTER IS PLACED IN RURAL SECTIONS, DETECTABLE WARNINGS SHALL BE PLACED 1' FROM THE EDGE OF BITUMINOUS ROADWAY AND/OR BITUMINOUS SHARED-USE PATH TO PROVIDE VISUAL CONTRAST.

⑧ ALL CONSTRUCTED CURBS MUST HAVE A CONTINUOUS DETECTABLE EDGE FOR THE VISUALLY IMPAIRED. THIS DETECTABLE EDGE REQUIRES DETECTABLE WARNINGS WHEREVER THERE IS ZERO-INCH HIGH CURB. CURB TAPERS ARE CONSIDERED A DETECTABLE EDGE WHEN THE TAPER STARTS WITHIN 3" OF THE EDGE OF THE DETECTABLE WARNINGS AND UNIFORMLY RISES TO A 3-INCH MINIMUM CURB HEIGHT. ANY CURB NOT PART OF A CURB TAPER AND LESS THAN 3 INCHES IN HEIGHT IS NOT CONSIDERED A DETECTABLE EDGE AND THEREFORE IS NOT COMPLIANT WITH ACCESSIBILITY STANDARDS.

⑨ DRILL AND GROUT 1 - NO. 4 12" LONG REINFORCEMENT BAR (EPOXY COATED) WITH 3" MIN. COVER. REINFORCEMENT BARS ARE NOT NEEDED IF THE APPROACH NOSE IS POURED INTEGRAL WITH THE V CURB.

⑩ DRILL AND GROUT 2 - NO. 4 12" LONG REINFORCEMENT BARS (EPOXY COATED) WITH 3" MIN. COVER. REINFORCEMENT BARS ARE NOT NEEDED IF THE APPROACH NOSE IS POURED INTEGRAL WITH THE CURB AND GUTTER.

⑪ SIDE TREATMENT EXAMPLES SHOWN ARE WHEN THE INITIAL LANDING IS APPROXIMATELY LEVEL WITH THE FULL HEIGHT CURB (I.E. 6' LONG RAMP FOR 6" HIGH CURB). WHEN THE INITIAL LANDING IS MORE THAN 1" BELOW FULL HEIGHT CURB REFER TO SHEETS 1 & 2 TO MODIFY THE CURB HEIGHT TAPERS AND MAINTAIN POSITIVE BOULEVARD DRAINAGE.

⑫ NEAREST EDGE OF DETECTABLE WARNING SURFACES SHALL BE PLACED 12' MINIMUM TO 15' MAXIMUM FROM THE NEAREST RAIL. FOR SKEWED RAILWAYS IN NO INSTANCE SHALL THE DETECTABLE WARNING BE CLOSER THAN 12' MEASURED PERPENDICULAR TO THE NEAREST RAIL.

⑬ WHEN PEDESTRIAN GATES ARE PROVIDED, DETECTABLE WARNING SURFACES SHALL BE PLACED ON THE SIDE OF THE GATES OPPOSITE THE RAIL, 2' FROM THE APPROACHING SIDE OF THE GATE ARM. THIS CRITERIA GOVERNS OVER NOTE ⑫ .

⑭ CROSSING SURFACE SHALL EXTEND 2' MINIMUM PAST THE OUTSIDE EDGE OF WALK OR SHARED-USE PATH.

⑮ 3' FOR MEDIANS AND SPLITTER ISLANDS. NOSE CAN BE REDUCED TO 2' ON FREE RIGHT ISLANDS.

⑯ SIDEWALK TO BE PLACED 8.75' MIN. FROM THE FACE OF CURB/PROJECTED FACE OF CURB. THIS ENSURES MIN. CLEARANCE BETWEEN THE SIDEWALK AND GATE ARM COUNTERWEIGHT SUPPORTS.

REVISION:

APPROVED: JANUARY 23, 2017

OPERATIONS ENGINEER

REVISED 1-18

CITY PL. NO. STRT-6

PUBLISHED 1-18

MINNESOTA DEPARTMENT OF TRANSPORTATION

STATE DESIGN ENGINEER

REVISED:

APPROVED: 1-23-2017

PEDESTRIAN CURB RAMP DETAILS

STANDARD PLAN 5-297.250 | 4 OF 6

NO	DATE	BY	CKD	APPR	REVISION

I hereby certify that this plan, specification or report was prepared by me or under my direct supervision and that I am a duly Licensed Professional Engineer under the laws of the State of Minnesota.

Signature: MICHAEL J. PAYNE

Date: 3-13-18 License#: 50484

City of Plymouth

PLYMOUTH, MINNESOTA
KILMER PARK STREET
RECONSTRUCTION

DETAILS

STATE AID PROJECT NO.	DRAWN BY	DATE
----	M. PAYNE	2-18
COUNTY PROJECT NO.	DESIGNED BY	
----	M. PAYNE	2-18
	CHECKED BY	
CITY PROJECT NO.	M. PAYNE	2-18
ST189001.001	REVIEWED BY	
	J. RENNEBERG	2-18

SHEET 12 OF 106

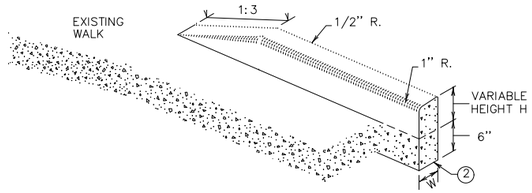

V CURB ADJACENT TO LANDSCAPE
CURB WITHIN SIDEWALK LIMITS

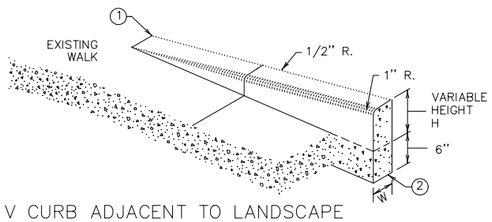

V CURB ADJACENT TO LANDSCAPE
CURB OUTSIDE SIDEWALK LIMITS

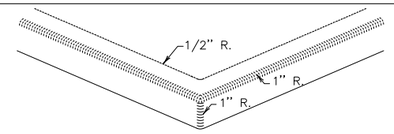

V CURB INTERSECTION

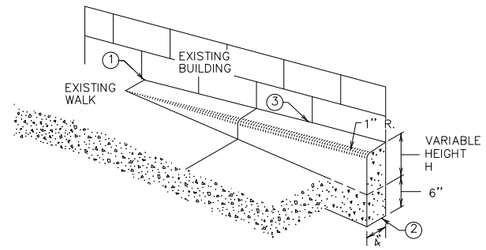

V CURB ADJACENT TO BUILDING OR BARRIER

CONCRETE CURB DESIGN V	
CURB HEIGHT H	CURB WIDTH W
6"	4"
6"	6"

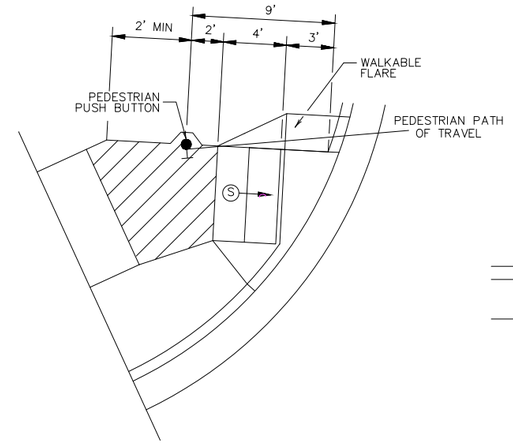

SEMI-DIRECTIONAL RAMP (3,4,9)

3' DOME SETBACK, 4' LONG RAMP AND PUSH BUTTON 9' FROM THE BACK OF CURB

PRIMARILY USED FOR APS APPLICATIONS WHERE THE PAR DOES NOT CONTINUE PAST THE PUSH BUTTON (DEAD-END SIDEWALK)

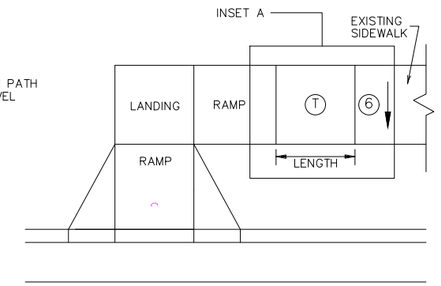

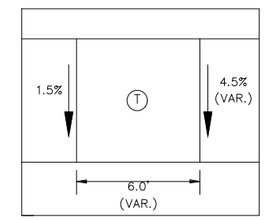

INSET A

TRANSITION PANEL 4 5

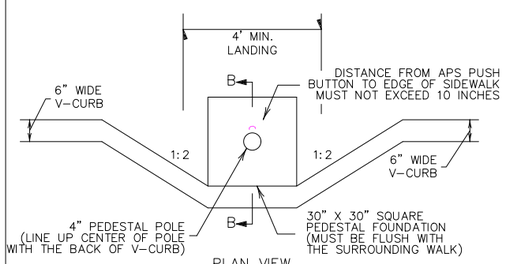

PLAN VIEW

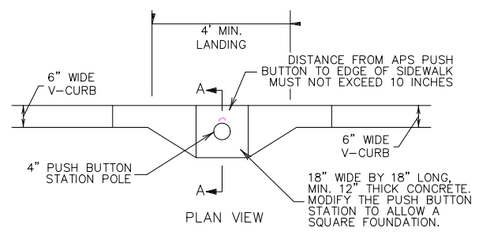

PLAN VIEW

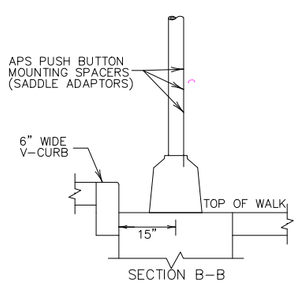

SECTION B-B

SIGNAL PEDESTAL & PUSH BUTTON (V-CURB)

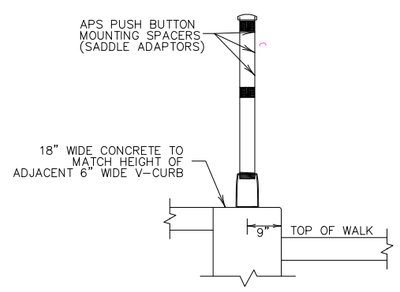

SECTION A-A

PUSH BUTTON STATION (V-CURB)

NOTES:

A WALKABLE FLARE IS AN 8-10% CONCRETE FLARE THAT IS REQUIRED WHEN THE FLARE IS ADJACENT TO A WALKABLE SURFACE, OR WHEN THE PEDESTRIAN PATH OF TRAVEL OF A PUSH BUTTON TRAVERSES THE FLARE.

ALL V CURB CONTRACTION JOINTS SHALL MATCH CONCRETE WALK JOINTS.

WHERE RIGHT-OF-WAY ALLOWS, USE OF V CURB SHOULD BE MINIMIZED. GRADING ADJACENT TURF OR SLOPING ADJACENT PAVEMENT IS PREFERRED.

V CURB SHALL BE PLACED OUTSIDE THE SIDEWALK LIMITS WHEN RIGHT OF WAY ALLOWS.

V CURB NEXT TO BUILDING SHALL BE A 4" WIDTH AND SHALL MATCH PREVIOUS TOP OF SIDEWALK ELEVATIONS.

1. END TAPERS AT TRANSITION SECTION SHALL MATCH INPLACE SIDEWALK GRADES.
2. ALL V CURB SHALL MATCH BOTTOM OF ADJACENT WALK.
3. EDGE BETWEEN NEW V CURB AND INPLACE STRUCTURE SHALL BE SEALED AND BOND BREAKER SHALL BE USED BETWEEN EXISTING STRUCTURE AND PLACED V-CURB.
4. THE MAX. RATE OF CROSS SLOPE TRANSITIONING IS 1' LINEAR FOOT OF SIDEWALK PER HALF PERCENT CROSS SLOPE. WHEN PAR WIDTH IS GREATER THAN 6' OR THE RUNNING SLOPE IS GREATER THAN 5%, DOUBLE THE CALCULATED TRANSITION LENGTH.
5. TRANSITION PANELS ARE TO ONLY BE USED AFTER THE RAMP, OR IF NEEDED, LANDING ARE AT THE FULL CURB HEIGHT (TYPICAL SECTION).
6. EXISTING CROSS SLOPE GREATER THAN 2.0%.

LEGEND

THESE LONGITUDINAL SLOPE RANGES SHALL BE THE STARTING POINT. IF SITE CONDITIONS WARRANT, LONGITUDINAL SLOPES UP TO 8.3% OR FLATTER ARE ALLOWED.

S — INDICATES PEDESTRIAN RAMP – SLOPE SHALL BE BETWEEN 5.0% MINIMUM AND 8.3% MAXIMUM IN THE DIRECTION SHOWN AND THE CROSS SLOPE SHALL NOT EXCEED 2.0%.

LANDING AREA – 4' X 4' MIN. (5' X 5' MIN. PREFERRED) DIMENSIONS AND MAX 2.0% SLOPE IN ALL DIRECTIONS. LANDING SHALL BE FULL WIDTH OF INCOMING PARS.

T — TRANSITION PANEL(S) – TO BE USED FOR TRANSITIONING THE CROSS-SLOPE OF A RAMP TO THE EXISTING WALK CROSS-SLOPE. RATE OF TRANSITION SHOULD BE 0.5% PER 1 LINEAR FOOT OF WALK. SEE THIS SHEET FOR ADDITIONAL INFORMATION.

PUBLISHED 1-18
CITY PL. NO. STRT-7
REVISED 1-18

REVISION:

APPROVED: JANUARY 23, 2017
OPERATIONS ENGINEER

MINNESOTA DEPARTMENT OF TRANSPORTATION

STATE DESIGN ENGINEER

REVISED:

APPROVED: 1-23-2017

PEDESTRIAN CURB RAMP DETAILS

STANDARD PLAN 5-297.250 | 5 OF 6

NO	DATE	BY	CKD	APPR	REVISION

I hereby certify that this plan, specification or report was prepared by me or under my direct supervision and that I am a duly Licensed Professional Engineer under the laws of the State of Minnesota.

Signature: MICHAEL J. PAYNE

Date: 3-13-18 License#: 50484

City of Plymouth

PLYMOUTH, MINNESOTA
KILMER PARK STREET RECONSTRUCTION

DETAILS

STATE AID PROJECT NO.	DRAWN BY	DATE
----	M. PAYNE	2-18
COUNTY PROJECT NO.	DESIGNED BY	
----	M. PAYNE	2-18
	CHECKED BY	
CITY PROJECT NO.	M. PAYNE	2-18
ST189001.001	REVIEWED BY	
	J. RENNEBERG	2-18

SHEET 13 OF 106

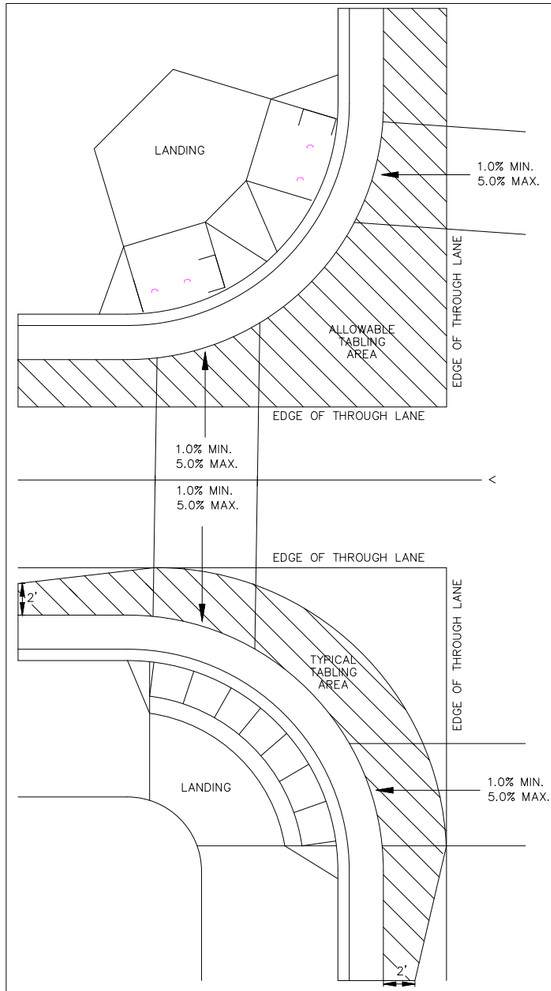

CURB LINE AND ROAD CROSSING ADJUSTMENTS

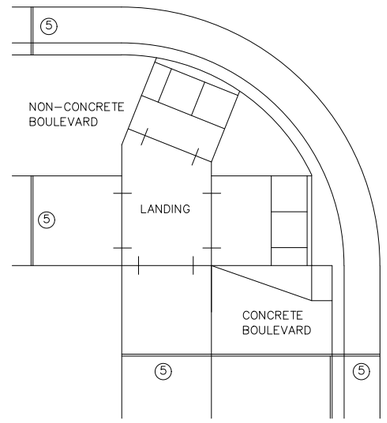

EXPANSION MATERIAL PLACEMENT FOR CONCRETE AND BITUMINOUS ROADWAYS

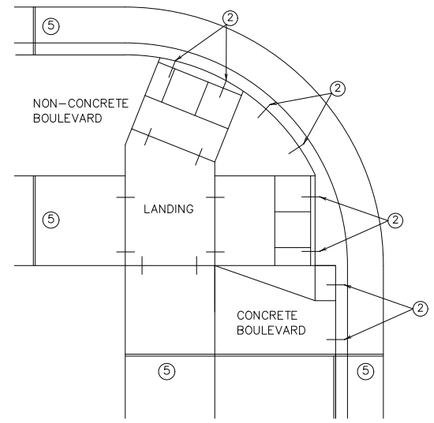

OPTIONAL CURB LINE REINFORCEMENT PLACEMENT ON BITUMINOUS ROADWAYS 4

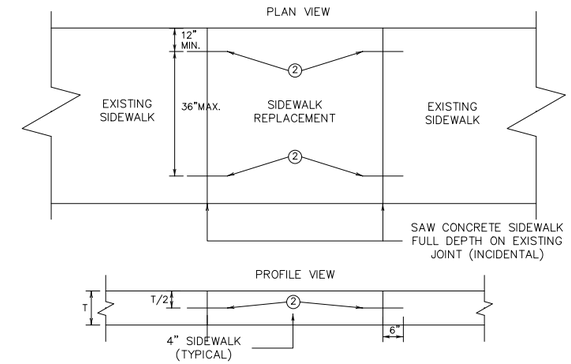

OPTIONAL SIDEWALK REINFORCEMENT

SIDEWALK REINFORCEMENT TO BE USED ONLY WHEN SPECIFIED IN THE PLAN.

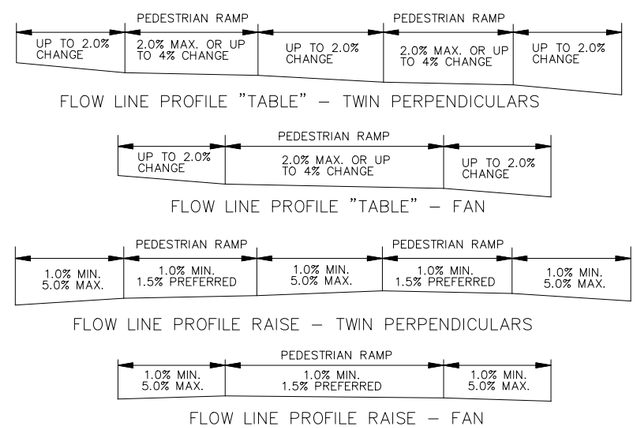

FLOW LINE PROFILE "TABLE" – TWIN PERPENDICULARS

FLOW LINE PROFILE "TABLE" – FAN

FLOW LINE PROFILE RAISE – TWIN PERPENDICULARS

FLOW LINE PROFILE RAISE – FAN

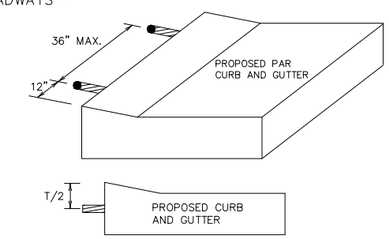

OPTIONAL CURB LINE REINFORCEMENT DETAILS 2 4

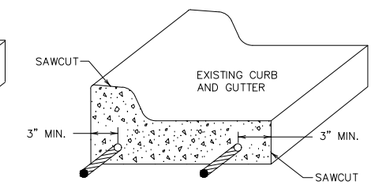

FOR USE ON CURB RAMP RETROFITS

CURB AND GUTTER REINFORCEMENT 3

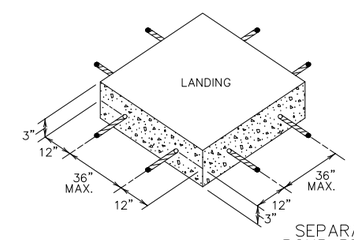

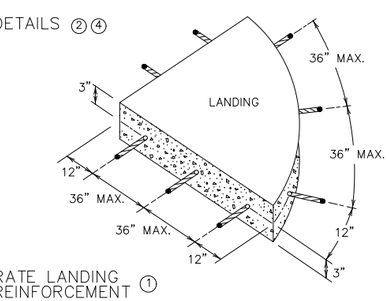

SEPARATE LANDING POUR REINFORCEMENT 1

"TABLING" OF CROSSWALKS MEANS MAINTAINING LESS THAN 2% CROSS SLOPE WITHIN A CROSSWALK, IS REQUIRED WHEN A ROADWAY IS IN A STOP OR YIELD CONDITION AND THE PROJECT SCOPE ALLOWS.

RECONSTRUCTION PROJECTS: ON FULL PAVEMENT REPLACEMENT PROJECTS "TABLING" OF ENTIRE CROSSWALK SHALL OCCUR WHEN FEASIBLE.

MILL & OVERLAY PROJECTS: "TABLING" OF FLOW LINES, IN FRONT OF THE PEDESTRIAN RAMP, IS REQUIRED WHEN THE EXISTING FLOW LINE IS GREATER THAN 2%. WARPING OF THE BITUMINOUS PAVEMENT CAN NOT EXTEND INTO THE THROUGH LANE. TABLE THE FLOW LINE TO 2% OR AS MUCH AS POSSIBLE WHILE ADHERING TO THE FOLLOWING CRITERIA;
1) 1.0% MIN. CROSS-SLOPE OF THE ROAD
2) 5.0% MAX. CROSS-SLOPE OF THE ROAD
3) "TABLE" FLOW LINE UP TO 4% CHANGE FROM EXISTING SLOPE IN FRONT OF PEDESTRIAN RAMP
4) UP TO 2% CHANGE IN FLOW LINE FROM EXISTING SLOPE BEYOND THE PEDESTRIAN CURB RAMP

STAND-ALONE ADA RETROFITS: FOLLOW MILL & OVERLAY CRITERIA ABOVE HOWEVER ALL PAVEMENT WARPING IS DONE WITH BITUMINOUS PATCHING ON BITUMINOUS ROADWAYS AND FULL-DEPTH APRON REPLACEMENT ON CONCRETE ROADWAYS.

RAISING OF CURB LINES SHOULD OCCUR IN VERTICALLY CONSTRAINED AREAS. RAISE THE CURB LINES ENOUGH TO ALLOW COMPLIANT RAMPS OR AS MUCH AS POSSIBLE WHILE ADHERING TO THE FOLLOWING CRITERIA;
1) 1.0% MIN. AND 5.0% MAXIMUM CROSS-SLOPE OF THE ROAD
2) 1.0% MIN. FLOW LINE (ON EITHER SIDE OF PEDESTRIAN RAMP) TO MAINTAIN POSITIVE DRAINAGE
3) 5.0% RECOMMENDED MAX. FLOW LINE
4) LONGITUDINAL THROUGH LANE ROADWAY TAPERS SHOULD BE 1" VERTICAL PER 15' HORIZONTAL

NOTES:

1. TO ENSURE RAMPS AND LANDINGS ARE PROPERLY CONSTRUCTED, ALL INITIAL LANDINGS AT A TOP OF A RAMPED SURFACE (RUNNING SLOPE GREATER THAN 2%) SHALL BE FORMED AND PLACED SEPARATELY IN AN INDEPENDENT CONCRETE POUR. FOLLOW SIDEWALK REINFORCEMENT DETAILS ON THIS SHEET FOR ALL SEPARATELY POURED INITIAL LANDINGS.
2. DRILL AND GROUT NO. 4 12" LONG REINFORCEMENT BARS AT 36" MAXIMUM CENTER TO CENTER (EPOXY COATED). BARS TO BE ADJUSTED TO MATCH RAMP GRADE.
3. DRILL AND GROUT 2 – NO. 4 X 12" LONG REINFORCEMENT BARS (EPOXY COATED). REINFORCEMENT REQUIRED FOR ALL CONSTRUCTION JOINTS WITHIN RADIUS.
4. THIS OPTIONAL CURB LINE REINFORCEMENT DETAIL SHOULD ONLY BE USED ON BITUMINOUS ROADWAYS WHEN SPECIFIED IN THE PLAN.
5. 1/2 IN. PREFORMED JOINT FILLER MATERIAL PER MNDOT SPEC. 3702.

CITY PL. NO. STRT-8
REVISED 1-18
PUBLISHED 1-18

REVISION:

APPROVED: JANUARY 23, 2017
OPERATIONS ENGINEER

MINNESOTA DEPARTMENT OF TRANSPORTATION
STATE DESIGN ENGINEER
REVISED:
APPROVED: 1-23-2017

PEDESTRIAN CURB RAMP DETAILS

STANDARD PLAN 5-297.250 | 6 OF 6

NO	DATE	BY	CKD	APPR	REVISION

I hereby certify that this plan, specification or report was prepared by me or under my direct supervision and that I am a duly Licensed Professional Engineer under the laws of the State of Minnesota.
Signature: MICHAEL J. PAYNE
Date: 3-13-18 License#: 50484

City of Plymouth

PLYMOUTH, MINNESOTA
KILMER PARK STREET RECONSTRUCTION

DETAILS

STATE AID PROJECT NO.	DRAWN BY M. PAYNE	DATE 2-18
COUNTY PROJECT NO.	DESIGNED BY M. PAYNE	2-18
CITY PROJECT NO. ST189001.001	CHECKED BY M. PAYNE	2-18
	REVIEWED BY J. RENNEBERG	2-18

SHEET 14 OF 106

DRAIN BASIN DETAIL

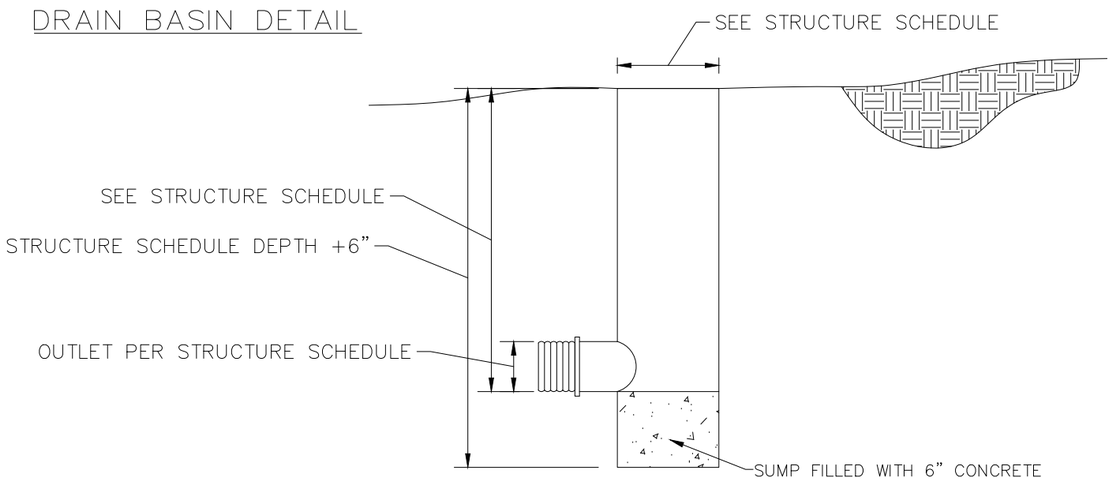

DRAIN BASIN NOTES:

1. CONTRACTOR SHALL INSTALL DRAIN BASIN PER MANUFACTURER SPECIFICATIONS AND RECOMMENDATIONS.
2. DRAIN BASINS SHALL BE LOCATED IN THE FIELD BY ENGINEER.
3. DRAIN BASINS SHALL USE STANDARD SLOTTED GRATE.
4. CONTRACTOR SHALL FILL 6" SUMP WITH CONCRETE (INCIDENTAL).

DRAIN BASIN NOTES:

1. CONTRACTOR SHALL INSTALL DRAIN BASIN PER MANUFACTURER SPECIFICATIONS AND RECOMMENDATIONS.
2. DRAIN BASINS SHALL BE LOCATED IN THE FIELD BY ENGINEER.
3. DRAIN BASINS SHALL USE STANDARD SLOTTED GRATE.
4. CONTRACTOR SHALL FILL 6" SUMP WITH CONCRETE (INCIDENTAL).

CB 45 WEIR DETAIL

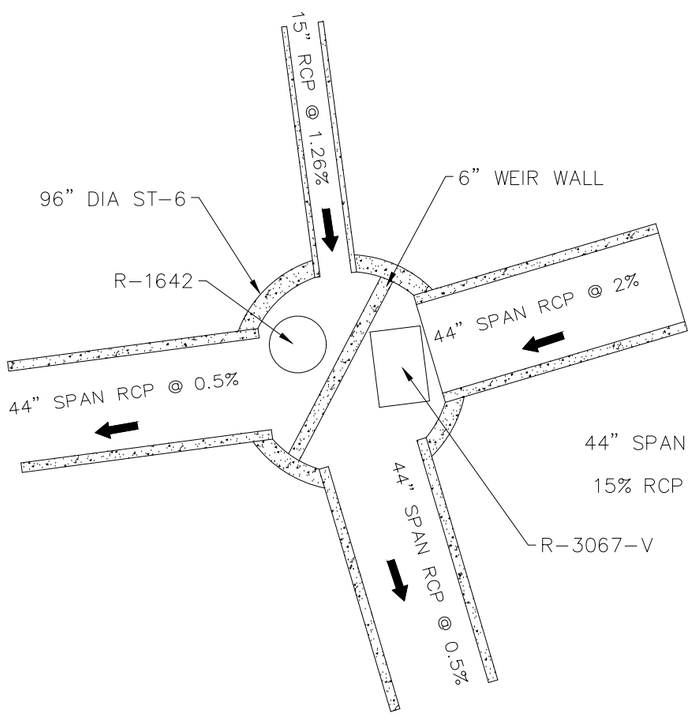

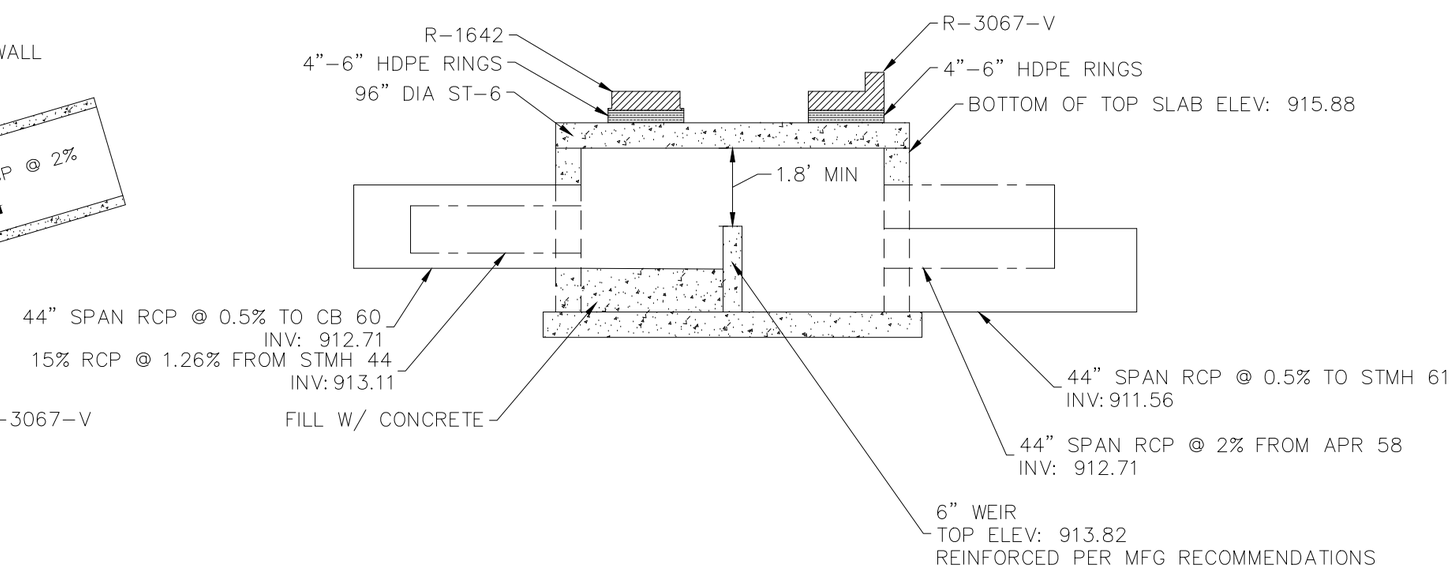

NO	DATE	BY	CKD	APPR	REVISION

I hereby certify that this plan, specification or report was prepared by me or under my direct supervision and that I am a duly Licensed Professional Engineer under the laws of the State of Minnesota.

Signature: MICHAEL J. PAYNE

Date: 3-13-18 License#: 50484

City of Plymouth

PLYMOUTH, MINNESOTA
KILMER PARK STREET RECONSTRUCTION

DETAILS

STATE AID PROJECT NO.	DRAWN BY	DATE
----	M. PAYNE	2-18
COUNTY PROJECT NO.	DESIGNED BY	
----	M. PAYNE	2-18
CITY PROJECT NO.	CHECKED BY	
ST189001.001	M. PAYNE	2-18
	REVIEWED BY	
	J. RENNEBERG	2-18

PROJECT DESCRIPTION/LOCATION AND SCOPE
SEE COVER SHEET FOR LOCATION MAP, PROJECT NUMBERS, AND DESCRIPTION OF PROJECT SCOPE. PERMANENT STORMWATER BEST MANAGEMENT PRACTICES (BMPS) ARE NOT REQUIRED ON THIS PROJECT. BEST MANAGEMENT PRACTICES (BMPS) FOR EROSION AND SEDIMENT CONTROL WILL BE IMPLEMENTED DURING CONSTRUCTION.

SPECIAL IMPAIRED WATERS
THERE ARE NO IMPAIRED WATERS ON THIS PROJECT SITE.

ENVIRONMENTALLY SENSITIVE AREAS
ALL ENVIRONMENTALLY SENSITIVE AREAS, INCLUDING WETLANDS, ARE LABELED AS "ENVIRONMENTALLY SENSITIVE AREAS" IN THE PLANS.

LONG TERM MAINTENANCE AND OPERATION
MAINTENANCE STAFF FROM THE CITY OF PLYMOUTH ARE RESPONSIBLE FOR THE LONG TERM MAINTENANCE AND OPERATION OF THE PERMANENT STORMWATER SYSTEMS.

SWPPP MAINENANCE
THE CONTRACTOR IS RESPONSIBLE FOR PROVIDING A CERTIFIED EROSION AND SEDIMENT CONTROL SUPERVISOR WHO IS RESPONSIBLE FOR OVERSEEING THE IMPLEMENTATION OF THE SWPPP. THE CONTRACTOR IS RESPONSIBLE TO PROVIDE A CERTIFIED SWPPP DESIGNER OR CONSTRUCTION SITE MANAGER WHO IS RESPONSIBLE FOR FINALIZING, CERTIFYING, AND MAINTAINING THE SWPPP DOCUMENT.

EROSION AND SEDIMENT CONTROL SUPERVISOR
IN ACCORDANCE WITH SPEC. 2573.3 A1, THE CONTRACTOR WILL PROVIDE A CERTIFIED EROSION AND SEDIMENT CONTROL SUPERVISOR IN GOOD STANDING WHO IS KNOWLEDGEABLE AND EXPERIENCED IN THE APPLICATION OF EROSION PREVENTION AND SEDIMENT CONTROL BMPS. IF NO SPECIFIC PAY ITEM IS INCLUDED, THE EROSION AND SEDIMENT CONTROL SUPERVISOR IS INCIDENTAL. THE EROSION AND SEDIMENT CONTROL SUPERVISOR WILL WORK WITH THE PROJECT ENGINEER TO OVERSEE THE IMPLEMENTATION OF THE SWPPP AND THE INSTALLATION, INSPECTION, AND MAINTENANCE OF THE EROSION PREVENTION AND SEDIMENT CONTROL BMPS BEFORE, DURING, AND AFTER CONSTRUCTION UNTIL THE NOTICE OF TERMINATION (NOT) HAS BEEN FILED WITH THE MPCA. THE EROSION AND SEDIMENT CONTROL SUPERVISOR IS RESPONSIBLE FOR COMPLYING WITH ALL THE INSPECTION AND MAINTENANCE REQUIREMENTS STATED IN THE NPDES PERMIT PART IV.E INSPECTIONS OF THE ENTIRE CONSTRUCTION SITE WILL OCCUR A MINIMUM OF ONCE EVERY SEVEN DAYS DURING ACTIVE CONSTRUCTION AND WITHIN 24 HOURS AFTER A RAINFALL EVENT GREATER THAN 0.5 INCHES IN 24 HOURS (THE NEXT INSPECTION FOLLOWING A RAINFALL EVENT GREATER THAN 0.5 INCHEAS IN 24 HOURS SHALL OCCUR WITHIN SEVEN DAYS OF THE RAINFALL EVENT). THE EROSION AND SEDIMENT CONTROL SUPERVISOR WILL THOROUGHLY INSPECT ALL EROSION PREVENTION AND SEDIMENT CONTROL BMPS TO ENSURE INTEGRITY AND EFFECTIVENESS OF EACH BMP. ALL INSPECTIONS AND MAINTENANCE CONDUCTED DURING CONSTRUCTION MUST BE RECORDED IN WRITING AND THESE RECORDS MUST BE RETAINED WITH THE SWPPP. INSPECTION REPORTS MUST BE SUBMITTED TO THE PROJECT ENGINEER AND SWPPP DESIGNER IN A FORMAT APPROVED BY THE ENGINEER. RECORDS OF EACH INSPECTION AND MAINTENANCE ACTIVITY SHALL INCLUDE:

A. DATE AND TIME OF INSPECTIONS;
B. NAME OF PERSONS CONDUCTING INSPECTIONS;
C. FINDINGS OF INSPECTIONS, INCLUDING RECOMMENDATIONS FOR CORRECTIVE ACTIONS;
D. DATE AND AMOUNT OF ALL RAINFALL EVENTS GREATER THAN 0.5 INCH IN 24 HOURS;
E. LOCATION, DESCRIPTION, AND PHOTO OF ANY DISCHARGES OFF THE PROJECT SITE;
F. DOCUMENTS AND CHANGES MADE TO THE SWPPP.

DRINKING WATER SOURCE MANAGEMENT AREA (DWSMA) AND KARST REGIONS
THE PROJECT IS NOT LOCATED IN A DWSMA OR KARST AREA.

SOIL TYPES
SOIL TYPES FOUND ON THIS PROJECT ARE FILL AND ALLUVIAL SOILS CONSISTING OF CLAYEY SAND, SANDY LEAN CLAY, SILTY SAND, LEAN CLAY SAND, LEAN CLAY WITH SAND, SANDY SILT, AND ORGANIC CLAY.

LAND FEATURE CHANGES
TOTAL DISTURBED AREA: 7.7 ACRES
TOTAL EXISTING IMPERVIOUS SURFACE AREA: 4.58 ACRES
TOTAL PROPOSED IMPERVIOUS SURFACE AREA: 4.96 ACRES
TOTAL NET CHANGE IN IMPERVIOUS SURFACE AREA: 0.38 ACRES

PROJECT CONTACTS
THE PROJECT ENGINEER AND CONTRACTOR ARE RESPONSIBLE FOR THE IMPLEMENTATION OF THE SWPPP AND INSTALLATION, INSPECTION, AND MAINTENANCE OF THE EROSION PREVENTION AND SEDIMENT CONTROL BMPS BEFORE, DURING, AND AFTER CONSTRUCTION UNTIL THE NOTICE OF TERMINATION HAS BEEN FILED.

ORGANIZATION	CONTACT NAME	PHONE
CITY OF PLYMOUTH	MIKE PAYNE	763-509-5538
MINNESOTA POLLUTION CONTROL AGENCY	AMY DELBECQ	651-757-2446
BASSETT CREEK WATERSHED MANAGEMENT COMMISSION	LAURA JESTER	952-270-1990

MPCA 24 HOUR EMERGENCY NOTIFICATION: 651-649-545 1-800-422-0798

LOCATION OF SWPPP REQUIREMENTS
THE REQUIRED SWPP ELEMENTS MAY BE LOCATED IN MANY PLACES WITHIN THE PLAN SET AS WELL AS IN THE SPECIAL PROVISIONS, MNDOT SPEC BOOK (2018 EDITION), CONSTRUCTION DIARIES, OR ON FILE WITH THE PROJECT OWNER. THE NOTES AND TABLE BELOW ARE INTENDED TO BE A QUICK REFERENCE FOR THE CONTRACTOR AND PROJECT ENGINEER TO USE IN THE FIELD. THERE MAY BE ADDITIONAL REQUIRED SWPPP ELEMENTS INCLUDED ON THE PROJECT THAT ARE NOT LISTED ON THIS SHEET. IN ADDITION, THE MINNESOTA NPDES/SDS CONSTRUCTION STORMWATER PERMIT SHOULD BE REVIEWED AND CONSULTED BY THE EROSION AND SEDIMENT CONTROL SUPERVISOR.

SITE MAPS AND DESIGN CALCULATIONS
IN ADDITION TO WHAT IS LOCATED WITHIN THIS PLAN, SITE MAPS AND BMP DESIGN CALCULATIONS ARE AVAILABLE UPON REQUEST. PLEASE CONTACT THE PROJECT ENGINEER WITH ANY QUESTIONS REGARDING THE SITE MAPS OR CALCULATIONS.

SWPPP AMENDMENTS
THE SWPP MUST BE AMENDED WHEN:

A. THERE IS A CHANGE IN DESIGN, CONSTRUCTION, OPERATION, MAINTENANCE, WEATHER, OR SEASON HAVING A SIGNIFICANT EFFECT ON DISCHARGE OF POLLUTANTS.
B. INSPECTIONS INDICATE THE SWPPP IS NOT EFFECTIVE.
C. A WATER QUALITY STANDARD CHANGES AND THE MPCA DETERMINS THE SWPPP MUST BE AMENDED TO COMPLY.

A DESCRIPTION OF ANY CHANGE TO THE SWPPP, ALONG WITH THE DATE AND NAME OF THE REVISION SHALL BE RECORDED AND INCLUDED WITH THE SWPPP AND RETAINED ON SITE. THE OWNER SHALL RETAIN ALL RECORDS AFTER COMPLETION OF THE PROJECT.

GENERAL SWPPP NOTES FOR CONSTRUCTION ACTIVITY

1. THE GENERAL CONTRACTOR IS RESPONSIBLE TO COMPLY WITH ALL ASPECTS OF THE NPDES CONSTRUCTION STORMWATER PERMIT AT ALL TIMES UNTIL THE NOTICE OF TERMINATION (NOT) HAS BEEN FILED WITH THE MPCA (FORM IS AVAILABLE FROM MPCA WEBSITE). THE CONTRACTOR WILL DEVELOP A CHAIN OF COMMAND WITH ALL OPERATORS ON THE SITE TO ENSURE THAT THE SWPPP WILL BE IMPLEMENTED AND STAY IN EFFECT UNTIL THE CONSTRUCTION PROJECT IS COMPLETE, THE ENTIRE SITE HAS UNDERGON FINAL STABILIZATION, AND AN NOT HAS BEEN SUBMITTED TO THE MPCA.

2. THE CONTRACTOR WILL PREPARE A WRITTEN, NOT ORAL, WEEKLY SCHEDULE OF PROPOSED EROSION CONTROL ACTIVITIES FOR THE PROJECT ENGINEER'S APPROVAL AS PER MNDOT SPEC. 1717.2D.

3. THE CONTRACTOR WILL COMPLY WITH THE REQUIREMENTS REGARDING POLLUTION PREVENTION MANAGEMENT DURING CONSTRUCTION, WHICH WILL INCLUDE, BUT NOT BE LIMITED TO, PROVIDING:
   A. CONCRETE WASHOUT AREAS FOR USE BY ALL SUBCONTRACTORS AND MATERIAL TESTING PERSONNEL. LOCATION OF WASHOUT AREAS MUST BE IDENTIFIED BY SIGNAGE AND MUST BE AT LEAST 200 FT FROM SITE PLAN REQUIREMENT AREAS (IF APPLICABLE) OR ENVIRONMENTALLY SENSITIVE AREAS, AND UTILIZE A LEAK-PROOF CONTAINMENT FACILITY OR IMPERMEABLE LINER THAT PREVENTS RUNOFF ONTO ADJACENT SOILS. AN ENGINEERED COLLECTION SYSTEM CAN ALSO BE USED IF IT IS APPROVED BY THE PROJECT ENGINEER.
   B. THE CONTRACTOR SHALL OBTAIN APPROVAL FROM THE PROJECT ENGINEER FOR A CHEMICAL STORAGE AREA AND DESIGNATE A FUELING AREA FOR CONSTRUCTION VEHICLES WITH MEANS TO CAPTURE ANY FUEL SPILLS.
   C. SOLID WASTE COLLECTION AND REMOVAL.
   D. SECONDARY CONTAINMENT FOR STORAGE OF HAZARDOUS MATERIALS.
   E. SECURED HAZARDOUS WASTE STORAGE CONTAINERS.
   F. CHEMICAL SPILL KITS.
   G. PORTABLE RESTROOM FACILITIES THAT ARE ANCHORED TO PREVENT TIPPING.

4. CHEMICALS MUST BE KEPT IN A SECURE STORAGE AREA IN SEALED CONTAINERS WHEN NOT IN USE. CHEMICAL STORAGE CONTAINERS MUST HAVE SECONDARY CONTAINMENT WHEN BEING USED OR STORED ON THE PROJECT SITE, AND PRODUCTS OR CHEMICALS THAT MAY LEACH POLLUTANTS MUST BE UNDER COVER (PLASTIC SHEETING OR TEMPORARY ROOF). CHEMICAL SPILLS OF ANY KIND (OIL, FUEL, FERTILIZER, ETC.) MUST BE CLEANED UP AND REMOVED FROM THE SITE IMMEDIATELY. THE CONTRACTOR MUST HAVE A SPILL KIT ON SITE AT ALL TIMES.

5. THE CONTRACTOR IS RESPONSIBLE FOR CREATING AND FOLLOWING A WRITTEN DISPOSAL PLAN FOR ALL HAZARDOUS WASTE MATERIALS. THE PLAN WILL INCLUDE HOW THE MATERIAL WILL BE DISPOSED OF AND THE LOCATION OF THE DISPOSAL SITE AND MUST BE SUBMITTED TO THE ENGINEER. LEAKS, SPILLS, OR OTHER RELEASES SHALL BE RESPONDED TO IN ACCORDANCE WITH MPCA SPILL CONTAINMENT AND REMEDIAL ACTION PROCEDURES.

6. BURNING OF ANY MATERIAL IS NOT ALLOWED WITHIN PROJECT BOUNDARY.

7. THE EROSION PREVENTION AND SEDIMENT CONTROL BMPS SHALL BE INSTALLED AS NECESSARY TO MINIMIZE EROSION FROM DISTURBED SURFACES AND CAPTURE SEDIMENT ONSITE. ALL EROSION CONTROL MEASURES SHALL BE IN PLACE PRIOR TO ANY REMOVAL WORK AND/OR GROUND DISTURBING ACTIVITIES AND SHALL BE MAINTAINED UNTIL THE POTENTIAL FOR EROSION HAS BEEN ELIMINATED. IF SEDIMENT CONTROLS ARE OVERLOADED (BASED ON FREQUENT FAILURE OR EXCESSIVE MAINTENANCE), ADDITIONAL UPGRADES OR REDUNDANT BMPS MUST BE INSTALLED.

8. PROVIDE A TEMPORARY VEGETATIVE COVER CONSISTING OF A SUITABLE, FAST-GROWING, DENSE GRASS SEED MIX SPREAD AT 1.5 TIMES THE USUAL RATE PER ACRE. IF TEMPORARY COVER IS TO REMAIN IN PLACE BEYOND THE PRESENT GROWING SEASON, TWO-THIRDS OF THE SEED MIX SHALL BE COMPOSED OF PERENNIAL GRASSES.

8. SEDIMENT CONTROL DEVICES MUST BE ESTABLISHED ON ALL DOWN GRADIENT PERIMETERS BEFORE ANY UP GRADIENT LAND DISTURBING ACTIVITIES BEGIN. SEDIMENT CONTROL DEVICES INCLUDE, BUT ARE NOT LIMITED TO THE FOLLOWING:

8.1. PERIMETER CONTROL SHALL BE LOCATED ON THE CONTOUR TO CAPTURE OVERLAND, LOW-VELOCITY SHEET FLOWS DOWN GRADIENT OF ALL EXPOSED SOILS AND PRIOR TO DISCHARGING TO SURFACE WATERS. THE BMP SHALL BE J-HOOKED AT A MAXIMUM OF 100 FOOT INTERVALS AND EACH SECTION SHALL CONTAIN NO MORE THAN $\frac{1}{4}$ ACRE OF DRAINAGE AREA.
8.2. SEDIMENT DAMAGE FROM STOCKPILES WILL BE MINIMIZED BY PLACING A ROW OF SUPER DUTY SILT FENCE A MINIMUM 5 FEET FROM THE TOE. IF THERE IS NOT ADEQUATE PROJECT AREA TO PLACE THE SILT FENCE MORE THAN 5 FEET FROM THE TOE OF SLOPE THE CONTRACTOR MAY SUBMIT AN ALTERNATIVE TO THE PROJECT ENGINEER FOR APPROVAL.
8.3. DITCH CHECKS (IF REQUIRED) WILL BE PLACED AS INDICATED ON THE PLANS DURING ALL PHASES OF CONSTRUCTION
8.3.1. TEMPORARY DITCH CHECKS (IF REQUIRED) WILL CONSIST OF USING ROCK DITCH CHECKS, BIOLOGS, AND ROCK WEEPERS IN FRONT OF CULVERT INLETS. IN LIEU OF REMOVING TEMPORARY DITCH CHECKS, THE ROCK MAY BE PUSHED INTO THE GROUND.
8.3.2. FILTER LOGS (IF REQUIRED) WILL BE PLACED DURING PERMANENT TURF ESTABLISHMENT AT THE INTERVALS IDENTIFIED IN THE PLAN.
8.4. FLOTATION SILT CURTAIN MAY BE USED AS PERIMETER CONTROL BUT ONLY FOR WORK ON THE SHORELINE OR BELOW THE WATERLINE. IMMEDIATELY AFTER THE CONSTRUCTION IN THE AREA IS COMPLETE, AN UPLAND BMP MUST BE INSTALLED IF EXPOSED SOILS CONTINUE TO DRAIN TO THE SURFACE WATER.
8.5. TEMPORARY SEDIMENT BASINS ARE REQUIRED WHERE TEN OR MORE ACRES DRAIN TO A COMMON LOCATION (FIVE IF DRAINING TO A SPECIAL OR IMPAIRED WATER).
8.5.1. BASIN VOLUME BEST BE A MINIMUM OF 1,800 CUBIC FEET PER ACRE OR DRAINAGE AREA TO THE BASIN (3,600 CUBIC FEET PER ACRE IF NO CALCULATIONS ARE PERFORMED).
8.5.2. OUTLET MUST ALLOW COMPLETE DRAWDOWN FOR MAINTENANCE AND A STABILIZED OVERFLOW. THE OUTLET MUST WITHDRAW WATER FROM THE SURFACE EXCEPT DURING FROZEN CONDITIONS.
8.5.3. IF A TEMPARY BASIN OF THE REQUIRED SIZE IS INFEASIBLE THE REASONS MUST BE DOCUMENTED IN THE SWPPP AND ALTERNATE BMPS MUST BE INSTALLED.

9. STORM SEWER INLETS WILL BE PROTECTED AT ALL TIMES WITH THE APPROPRIATE INLET PROTECTION FOR EACH SPECIFIC PHASE OF CONSTRUCTION. INLET PROTECTION DEVICES MAY NEED TO BE PLACED MULTIPLE TIMES IN THE SAME LOCATION OVER THE LIFE OF THE CONTRACT. INLET PROTECTION DEVICES WILL BE PAID FOR ONCE PER INLET REGARDLESS OF THE NUMBER OF TIMES THE BMP IS PLACED. ALL STORM SEWER INLET PROTECTION DEVICES WILL BE KEPT IN GOOD FUNCTIONAL CONDITION AT ALL TIMES. IF THE PROJECT ENGINEER DEEMS AN INLET PROTECTION DEVICE TO BE NONFUNCTIONAL, IN POOR CONDITION, INEFFECTIVE, OR NOT APPROPRIATE FOR THE CURRENT CONSTRUCTION ACTIVITIES IT WILL BE REPLACED WITH A SUITABLE ALTERNATIVE AT NO COST TO THE OWNER. FAILURE TO PERFORM WILL RESULT IN A DEDUCT.

10. THE CONTRACTOR WILL PLACE CONSTRUCTION ENTRANCES AND EXITS, AS NECESSARY, TO PREVENT TRACKING OF SEDIMENT ONTO PAVED SURFACES AND IN COMPLIANCE WITH PART IV.C OF THE NPDES PERMIT. CONSTRUCTION ENTRANCES AND EXITS WILL BE SUFFICIENTLY SIZED AND MAINTAINED TO PREVENT TRACK OUT. TYPE 5 MULCH (SLASH MULCH) OR AN APPROVED ENGINEER PRODUCT WILL BE ALLOWED FOR CONSTRUCTION ENTRANCES AND EXITS IN LIEU OF CRUSHED ROCK.

11. THE CONTRACTOR MUST USE METHODS AND OPERATION PROCEDURES THAT PREVENT DISCHARGE OR PLACEMENT OF BITUMINOUS GRINDINGS, CUTTINGS, MILLINGS, AND OTHER BITUMINOUS WASTES FROM AREAS OF EXISTING OR FUTURE VEGETATED SOILS, AND ALL WATER CONVEYANCE SYSTEMS, INCLUDING INLETS.

12. THE CONTRACTOR MUST USE METHODS AND OPERATIONAL PROCEDURES THAT PREVENT CONCRETE DUST, PARTICLES, SAW CUT SLURRY, PLANING WASTE, AND OTHER CONCRETE WASTES FROM LEAVING PUBLIC RIGHT OR WAY. DEPOSITING IN EXISTING OR FUTURE VEGETATED AREAS OR ENTERING STORMWATER CONVEYANCE SYSTEM INCLUDING INLETS AND CURB FLOW LIES. ONSITE RELEASE OF CONCRETE SLURRY IS PERMISSIBLE IF MINNESOTA POLLUTION CONTROL GUIDANCE FOR ROAD CONSTRUCTION CONCRETE SLURRY IS FOLLOWED.

13. ALL TOPSOIL IN DISTURBED AREAS MUST BE REMOVED AND STOCKPILED FOR LATER PLACEMENT. AVOID COMPACTION AS MUCH AS IS FEASIBLE IN ALL AREAS WHERE COMPACTION IS NOT REQUIRED FOR CONSTRUCTION. COMPACTION MUST BE AVOIDED IN ALL AREAS DESIGNATED FOR INFILTRATION.

14. DITCHES AND EXPOSED SOILS MUST BE KEPT IN AN EVEN ROUGH GRADED CONDITION IN ORDER TO BE ABLE TO APPLY EROSION CONTROL MULCHES AND BLANKETS. ALL EROSION CONTROL BLANKETS MUST HAVE NATURAL NETTING.

15. ALL EXPOSED SOIL AREAS MUST BE TEMPORARILY OR PERMANENTLY STABILIZED NO MORE THAN 7 DAYS AFTER CONSTRUCTION ACTIVITY ON THAT PORTION OF THE SITE THAT HAS TEMPORARILY OR PERMANENTLY CEASED. ALL EXPOSED SOIL WITHIN 200 LINEAL FEET OF AND DRAINING TO A PUBLIC WATER WITH "WORK IN WATER RESTRICTIONS" AND DURING SPECIFIED FISH SPAWNING TIME FRAMES, MUST BE STABILIZED WITHIN 24 HOURS. IN MANY INSTANCES, THIS WILL REQUIRE STABILIZATION TO OCCUR MORE THAN ONCE DURING ROUGH GRADING. RAPID STABILIZATION METHOD 3 WILL BE USED TO PROVIDE TEMPORARY COVER IN THESE AREAS AS APPROPRIATE. SUBSTITUTE SEED MIXTURE 21–112 OR 21–111 FOR THE SPECIFIED SEED MIXTURE AS APPROPRIATE FOR THE SEASON.

16. THE NORMAL WETTED PERIMETER OF ANY TEMPORARY OR PERMANENT DRAINAGE DITCH THAT DRAINS WATER FROM THE CONSTRUCTION SITE, OR DIVERTS WATER AROUND THE CONSTRUCTION SITE, MUST BE STABILIZED WITHIN 200 LINEAL FEET FROM THE PROPERTY EDGE OR POINT OF DISCHARGE TO ANY SURFACE WATER. STABILIZATION MUST OCCUR WITHIN 24 HOURS OF CONNECTION TO A SURFACE WATER, EXISTING GUTTER, STORM SEWER INLET, DRAINAGE DITCH, OR OTHER STORMWATER CONVEYANCE SYSTEM ACCORDING TO SPEC 1717.2A2. RAPID STABILIZATION METHOD 4 WILL BE USED TO STABILIZE THESE AREAS (SUBSTITUTE SEE MIXTURE 21–112 OR 21–111 FOR THE SPECIFIED SEED MIXTURE AS APPROPRIATE FOR THE SEASON). THE REMAINDER OF THE DITCH MUST BE STABILIZED WITHIN 7 DAYS OF CONNECTION TO THE SURFACE WATER. PERMANENT EROSION CONTROL BLANKET OR RAPID STABILIZATION METHOD 4 (SUBSTITUTE SEE MIXTURE 21–112 OR 21–111 FOR THE SPECIFIED SEED MIXTURE AS APPROPRIATE FOR THE SEASON) WILL BE USED TO STABILIZE THESE AREAS. DISC ANCHORED MULCH AND HYDRAULIC SOIL STABILIZERS ARE NOT ALLOWED TO BE USED FOR PERMANENT DITCH STABILIZATION.

17. PRESERVE A NATURAL BUFFER OF AT LEAST 50 FEET (100 FEET IF WITHIN 1 MILE OF AND DRAINS TO A SPECIAL OR IMPAIRED WATER) BETWEEN DISTURBED AREAS AND FLOWS TO A SURFACE WATER (NOT REQUIRED AT DITCHES OR STORMWATER CONVEYANCE CHANNELS, STORM DRAIN INLETS, OR SEDIMENT BASINS). IF A BUFFER IS INFEASIBLE, PROVIDE AS LARGE A BUFFER AS POSSIBLE AND REDUNDANT SEDIMENT CONTROLS.

18. OUTLETS INTO SURFACE WATERS SHALL BE STABILIZED WITH ENERGY DISSIPATION WITHIN 24 HOURS OF BEING CONSTRUCTED.

19. ALL EXPOSED SOIL AREAS WILL BE STABILIZED PRIOR TO THE ONSET OF WINTER. ANY WORK STILL BEING PERFORMED WILL BE SNOW MULCHED, SEEDED, OR BLANKETED WITHIN THE TIME FRAMES LISTED IN THE MPCA'S GENERAL NPDES CONSTRUCTION STORMWATER PERMIT.

20. ALL TOPSOIL BERMS SHALL BE STABILIZED AS FOLLOWS:
 20.1. BETWEEN APRIL 1 – AUGUST 31, SEED WITH MIXTURE 21–111
 20.2. BETWEEN SEPTEMBER 1 – MARCH 31, SEED WITH SEED MIXTURE 21–112 AND TOP WITH RAPID STABILIZATION 2.

21. THE CONTRACTOR SHALL COMPLY WITH THE FOLLOWING INSPECTION AND MAINTENANCE REQUIREMENTS (INSPECTIONS MAY BE REDUCED UNDER CERTAIN CONDITIONS AS COVER IS ESTABLISHED AND CONDITIONS CHANGE AS DESCRIBED IN PART IV.3 OF THE NPDES PERMIT):
 21.1. SILT FENCE MUST BE REPAIRED, REPLACED, OR SUPPLEMENTED WHEN IT BECOMES NON–FUNCTIONAL OR SEDIMENT REACHES ½ THE HEIGHT OF THE SILT FENCE. REPAIRS MUST BE MADE WITHIN 24 HOURS OF DISCOVERY.
 21.2. INLET PROTECTION DEVICES SHOULD BE REPAIRED WHEN THEY BECOME NON–FUNCTIONAL OR SEDIMENT REACHES ½ THE HEIGHT AND/OR DEPTH OF THE DEVICE.
 21.3. TEMPORARY SEDIMENT BASINS, IF REQUIRED, MUST HAVE THE SEDIMENT REMOVED ONCE THE SEDIMENT HAS REACHED ½ THE STORAGE VOLUME WITHIN 72 HOURS OF DISCOVERY.
 21.4. TRACKED SEDIMENT MUST BE REMOVED WITHIN 24 HOURS OF DISCOVERY OF TRACKING ONTO PAVED SURFACES.
 21.5. ALL OTHER NON–FUNCTIONAL BMPS MUST BE REPAIRED, REPLACED, OR SUPPLEMENTED WITHIN 24 HOURS OF DISCOVERY.
 21.6. REINSTALL AS QUICKLY AS POSSIBLE ANY BMP REMOVED TO ACCOMMODATE SHORT TERM ACTIVITIES.
 21.7. CONTRACTOR IS RESPONSIBLE FOR MAINTAINING ALL BMPS UNTIL WORK HAS BEEN COMPLETED, SITE HAS UNDERGONE FINAL STABILIZATION, AND THE NOTICE OF TERMINATION HAS BEEN SUBMITTED TO THE MPCA IN ACCORDANCE WITH PART II.C OF THE CONSTRUCTION GENERAL PERMIT.
 21.8. CONTRACTOR SHALL SUBMIT ALL SWPPP INSPECTION RECORDS TO ENGINEER WITHIN 1 DAY OF COMPLETION.

22. IF SEDIMENT IS DEPOSITED IN A WATER OF THE STATE THE MATERIAL MUST BE REMOVED WITHIN 7 DAYS.

23. PAVEMENT SURFACES SHALL BE SWEPT WITHIN 24 HOURS OF DISCOVERY OF SEDIMENT OR TRACKING ONTO PAVEMENT THAT DRAINS TO CURB, INLETS, DITCHES, OR PONDS. PAVEMENT SHALL BE LIGHTLY WETTED PRIOR TO SWEEPING. THIS WORK IS INCIDENTAL.

24. TEMPORARY DEWATERING ACTIVITIES MAY BE REQUIRED. THEREFORE, IT IS POSSIBLE THAT A PERMIT FOR THE TEMPORARY APPROPRIATION OF WATERS OF THE STATE FROM MNDNR WILL BE REQUIRED FOR THIS PROJECT. THE CONTRACTOR WILL BE RESPONSIBLE FOR OBTAINING THIS PERMIT (FORMS ARE AVAILABLE FROM THE MNDNR WEBSITE). ALL TEMPORARY DEWATERING SHALL BE DISCHARGED TO AN APPROVED LOCATION FOR TREATMENT PRIOR TO DISCHARGE TO THE RECEIVING WATER. THE CONTRACTOR IS REQUIRED TO SUBMIT SITE PLANS TO THE PROJECT ENGINEER FOR APPROVAL PRIOR TO COMMENCING WORK ACCORDING TO SPEC 1717.2E.

25. BASIN DRAINING ACTIVITIES OF TURBID OR SEDIMENT LADEN WATER WILL BE DISCHARGED TO TEMPORARY SEDIMENT BASINS WHENEVER POSSIBLE. IN THE EVENT THAT IT IS NOT POSSIBLE TO DISCHARGE THE SEDIMENT LADEN WATER TO A TEMPORARY SEDIMENT BASIN THE WATER MUST BE TREATED SO THAT IT DOES NOT CAUSE A NUISANCE CONDITION IN THE RECEIVING WATERS OR TO DOWNSTREAM LANDOWNERS.

26. IT IS NOT ANTICIPATED THAT POLYMERS, FLOCCULANTS, OR OTHER SEDIMENTATION TREATMENT CHEMICALS WILL BE USED. HOWEVER, IF THE USE OF SUCH CHEMICALS BECOMES NECESSARY TO COMPLY WITH PERMIT REQUIREMENTS, IT MUST BE IN ACCORDANCE WITH PART IV.C.10 OF THE CONSTRUCTION GENERAL PERMIT.

27. ANY SUBSURFACE DRAINAGE TILES DAMAGED DURING CONSTRUCTION SHALL BE REPAIRED, REPLACED, OR REROUTED, AND CONNECTED TO THE EXISTING TILE OR DRAINAGE SYSTEM TO ENSURE THAT EXISTING UPLAND DRAINAGE IS PERPETUATED. THIS SHOULD BE DONE TO THE APPROVAL AND SATISFACTION OF THE ENGINEER.

28. TILLING FOR BEDS OR TREE HOLES MUST BE PLANTED AND MULCHED WITH WOODCHIPS WITHIN 7 DAYS OR STRAW MULCHED UNTIL PLANTING OPERATIONS CAN BE COMPLETED. FILTER LOGS SHALL BE INSTALLED, AS NEEDED, TO TRAP SEDIMENT ON THE LOWER EDGE OF BEDS OR TREE HOLES. FILTER LOGS WILL BE LEFT TO PHOTO DEGRADE.

MAP OF IMPAIRED WATERS

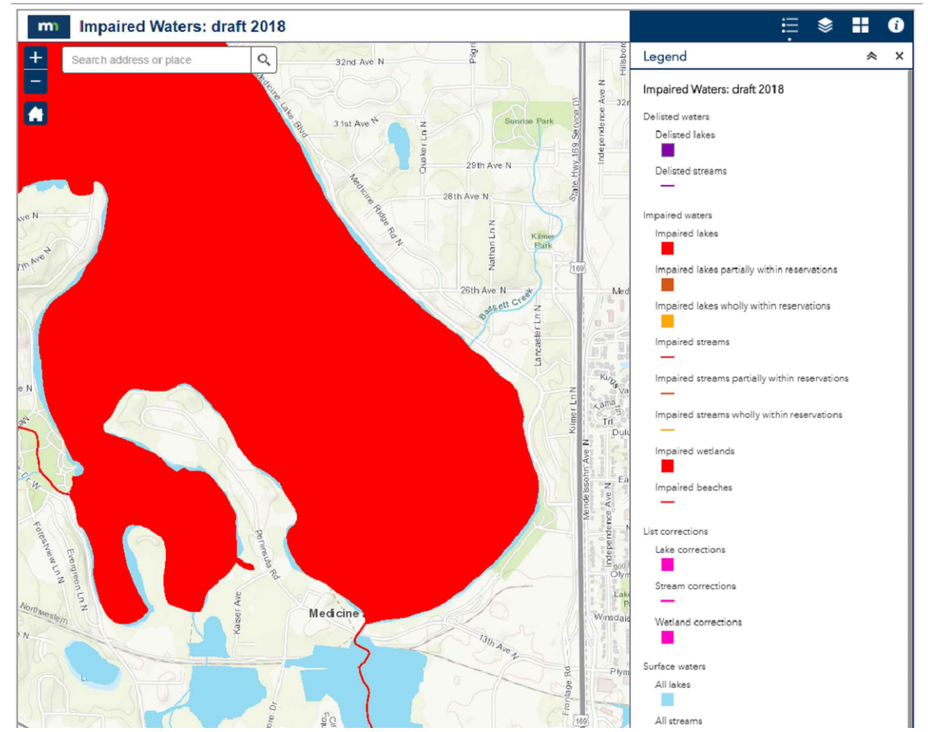

NO	DATE	BY	CKD	APPR	REVISION

I hereby certify that this plan, specification or report was prepared by me or under my direct supervision and that I am a duly Licensed Professional Engineer under the laws of the State of Minnesota.

Signature: MICHAEL J. PAYNE

Date: 3–13–18 License#: 50484

City of Plymouth

PLYMOUTH, MINNESOTA
KILMER PARK STREET RECONSTRUCTION

STORMWATER POLLUTION PREVENTION PLAN (SWPPP)

STATE AID PROJECT NO.	DRAWN BY	DATE
–––	M. PAYNE	2–18
COUNTY PROJECT NO.	DESIGNED BY M. PAYNE	2–18
–––	CHECKED BY M. PAYNE	2–18
CITY PROJECT NO. ST189001.001	REVIEWED BY J. RENNEBERG	2–18

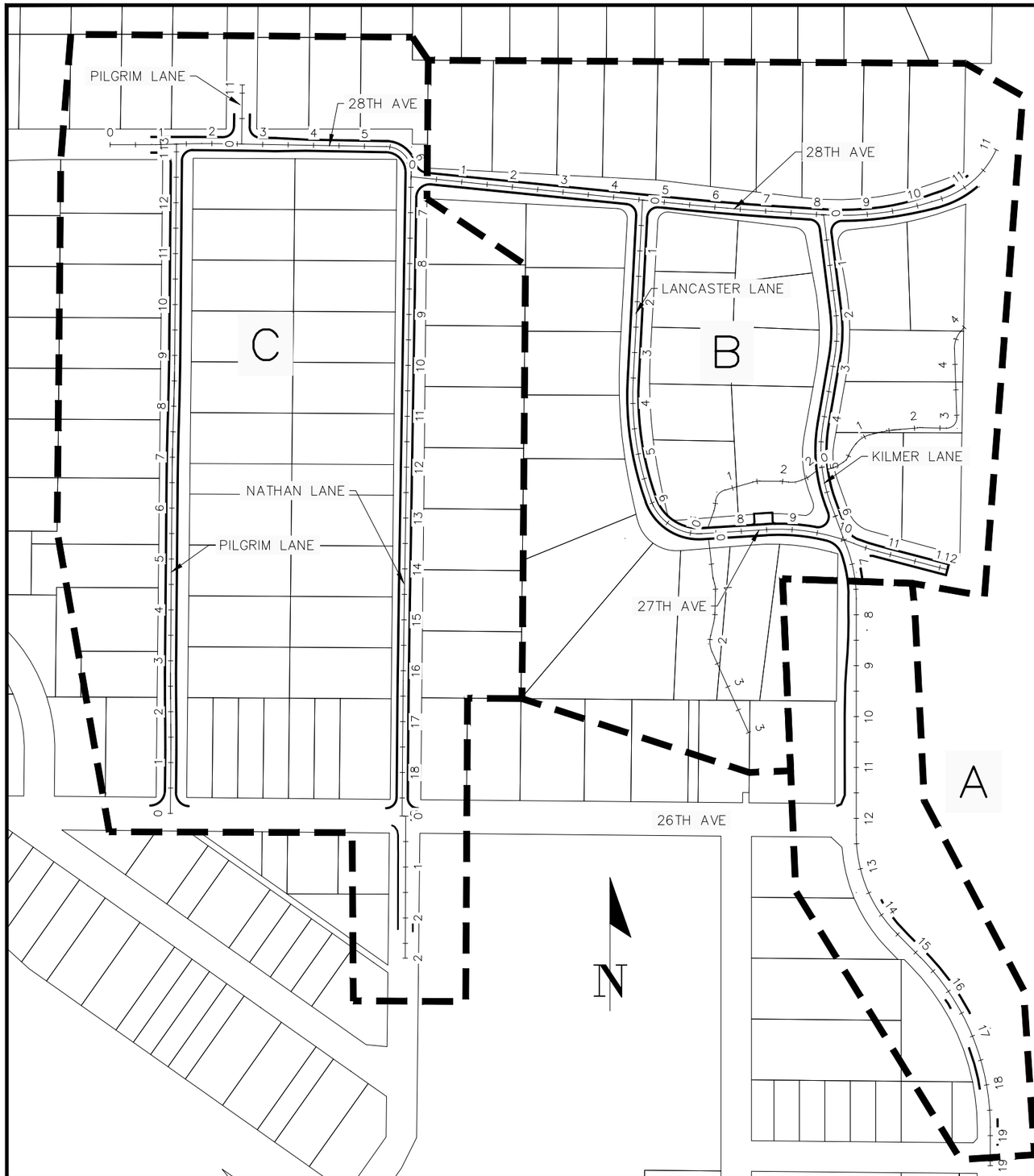

PHASING NOTES:

1. CONTRACTOR SHALL CONSTRUCT PROJECT IN SHOWN PHASES UNLESS APPROVED BY ENGINEER.
2. A NON PAVED DRIVING SURFACE SHALL BE ALLOWED ONLY IN ONE PHASE AT A TIME UNLESS APPROVED BY ENGINEER.
3. APPROVAL OF ENGINEER SHALL BE REQUIRED BEFORE STARTING CONSTRUCTION IN A DIFFERENT PHASE.
4. EACH AREA MUST BE SUBSTANTIALLY COMPLETED WITHIN 12 WEEKS OF REMOVAL OF EXISTING PAVEMENT.
5. SUBSTANTIAL COMPLETION OF AN AREA INCLUDES PLACEMENT OF BASE COURSE PAVEMENT.
6. CONTRACTOR SHALL SUBMIT PHASING PLAN AND SCHEDULE OF EACH AREA TO ENGINEER AT LEAST 1 WEEK PRIOR TO PUBLIC HEARING.
7. ANY DEVIATION OF PHASING PLAN SHALL REQUIRE APPROVAL OF ENGINEER.
8. IN AREA A KILMER LANE NORTH OF 26TH AVENUE, STATE HWY 169 RAMPS, AND 26TH AVENUE MUST REMAIN OPEN DURING CONSTRUCTION. A SHORT TERM CLOSURE MAY BE PERMITTED ON A CASE BY CASE BASIS AS APPROVED BY ENGINEER.

NO	DATE	BY	CKD	APPR	REVISION

I hereby certify that this plan, specification or report was prepared by me or under my direct supervision and that I am a duly Licensed Professional Engineer under the laws of the State of Minnesota.

Signature: MICHAEL J. PAYNE

Date: 3-13-18 License#: 50484

City of Plymouth

PLYMOUTH, MINNESOTA
KILMER PARK STREET RECONSTRUCTION

CONSTRUCTION PHASING MAP

STATE AID PROJECT NO.	DRAWN BY	DATE
----	M. PAYNE	2-18
COUNTY PROJECT NO.	DESIGNED BY	
----	M. PAYNE	2-18
CITY PROJECT NO.	CHECKED BY	
ST189001.001	M. PAYNE	2-18
	REVIEWED BY	
	J. RENNEBERG	2-18

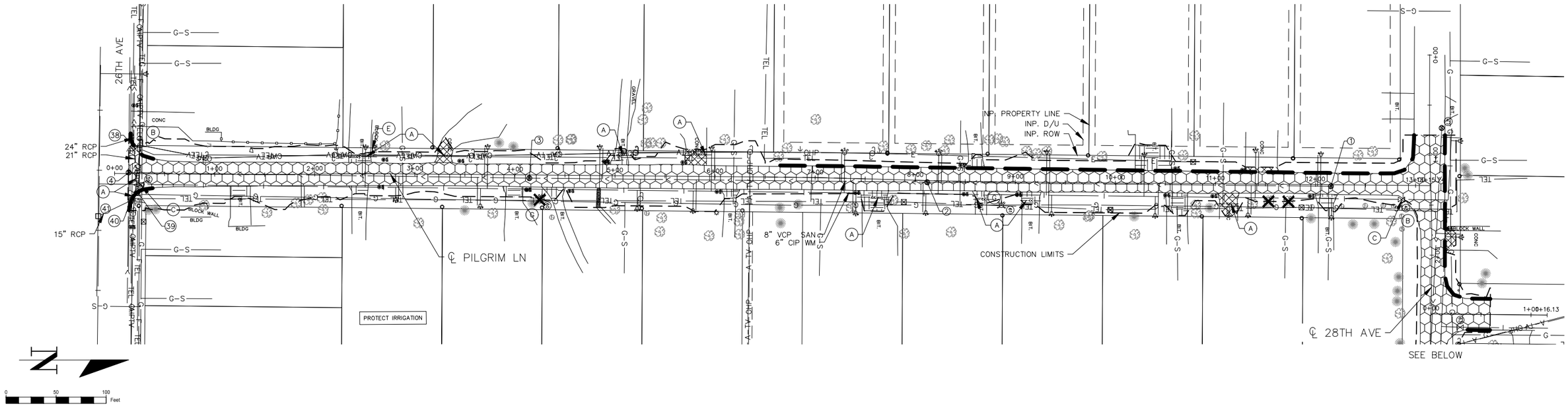

LEGEND

- CLEAR AND GRUB TREE. CONFIRM WITH ENGINEER PRIOR TO REMOVAL
- REMOVE CONCRETE SIDEWALK
- REMOVE BITUMINOUS ROADWAY PAVEMENT
- REMOVE BITUMINOUS TRAIL
- REMOVE CURB
- REMOVE CONCRETE DRIVEWAY
- REMOVE BITUMINOUS DRIVEWAY
- CONSTRUCTION LIMITS

GENERAL NOTES:

1. PROTECT ALL TREES THAT ARE NOT MARKED FOR REMOVAL.
2. TREES TO BE TRIMMED AS DIRECTED BY ENGINEER (INCIDENTAL).
3. TREES AND SHRUBS UNDER 4" IN DIA. TO BE REMOVED ARE NOT SHOWN ON PLANS.
4. TREES TO BE REMOVED MAY NOT BE SHOWN ON PLAN.
5. ALL BITUMINOUS PAVEMENT AND CONCRETE SIDEWALK SHALL BE SAW CUT AT THE MATCH POINT.
6. SAW CUT OF CONCRETE SIDEWALK AND BITUMINOUS PAVEMENT IS INCIDENTAL TO REMOVAL.
7. EXISTING STRUCTURE SCHEDULE SHALL LIST WORK TO EXISTING STRUCTURES. SEE SHEET 41.
8. CONTRACTOR SHALL SALVAGE AND INSTALL ALL MAILBOXES. CONTRACTOR SHALL ALSO PROVIDE TEMPORARY MAILBOXES.

NOTES

- (A) REMOVE STORM SEWER
- (B) SALVAGE SIGN
- (C) SALVAGE VALVE
- (D) ABANDON STORM SEWER
- (E) SALVAGE & INSTALL BLOCK WALL
- (F) REMOVE WALL
- (G) SALVAGE HYDRANT

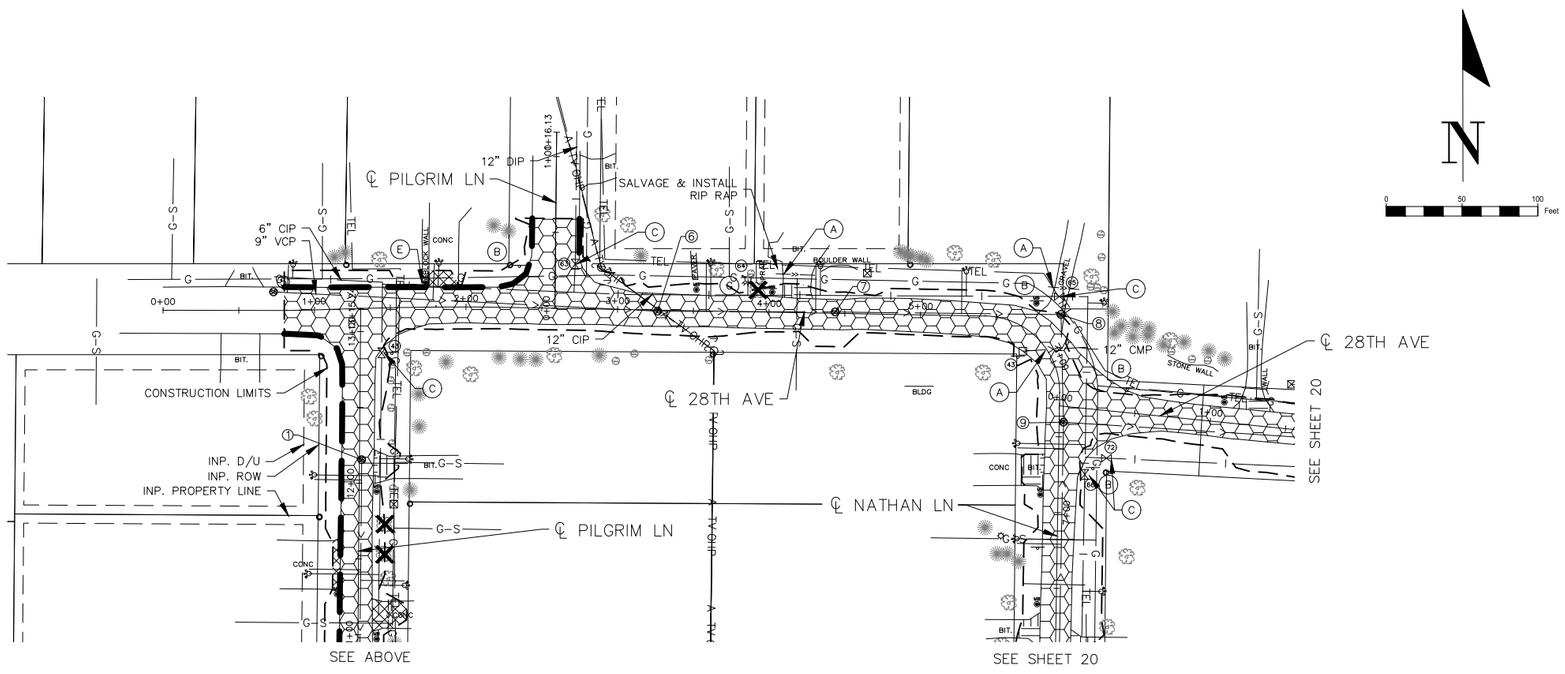

NO	DATE	BY	CKD	APPR	REVISION

I hereby certify that this plan, specification or report was prepared by me or under my direct supervision and that I am a duly Licensed Professional Engineer under the laws of the State of Minnesota.

Signature: MICHAEL J. PAYNE

Date: 3-13-18 License#: 50484

City of Plymouth

PLYMOUTH, MINNESOTA
KILMER PARK STREET RECONSTRUCTION

REMOVALS

PILGRIM LANE & 28TH AVE (WEST)

STATE AID PROJECT NO.	DRAWN BY	DATE
----	M. PAYNE	2-18
COUNTY PROJECT NO.	DESIGNED BY	
----	M. PAYNE	2-18
CITY PROJECT NO.	CHECKED BY	
ST189001.001	M. PAYNE	2-18
	REVIEWED BY	
	J. RENNEBERG	2-18

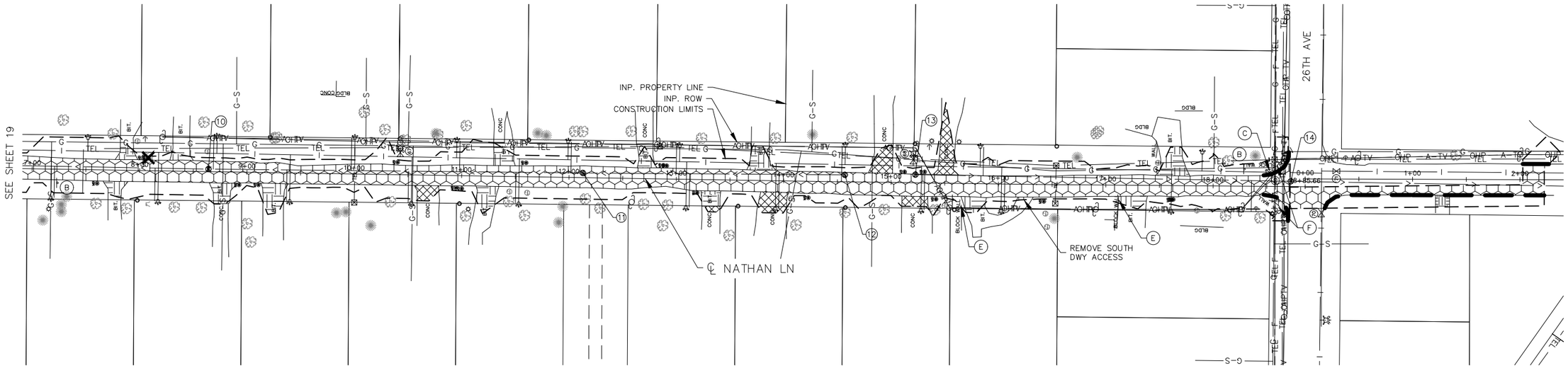

LEGEND

- CLEAR AND GRUB TREE. CONFIRM WITH ENGINEER PRIOR TO REMOVAL
- REMOVE CONCRETE SIDEWALK
- REMOVE BITUMINOUS ROADWAY PAVEMENT
- REMOVE BITUMINOUS TRAIL
- REMOVE CURB
- REMOVE CONCRETE DRIVEWAY
- REMOVE BITUMINOUS DRIVEWAY
- CONSTRUCTION LIMITS

GENERAL NOTES:

1. PROTECT ALL TREES THAT ARE NOT MARKED FOR REMOVAL.
2. TREES TO BE TRIMMED AS DIRECTED BY ENGINEER (INCIDENTAL).
3. TREES AND SHRUBS UNDER 4" IN DIA. TO BE REMOVED ARE NOT SHOWN ON PLANS.
4. TREES TO BE REMOVED MAY NOT BE SHOWN ON PLAN.
5. ALL BITUMINOUS PAVEMENT AND CONCRETE SIDEWALK SHALL BE SAW CUT AT THE MATCH POINT.
6. SAW CUT OF CONCRETE SIDEWALK AND BITUMINOUS PAVEMENT IS INCIDENTAL TO REMOVAL.
7. EXISTING STRUCTURE SCHEDULE SHALL LIST WORK TO EXISTING STRUCTURES. SEE SHEET 41.
8. CONTRACTOR SHALL SALVAGE AND INSTALL ALL MAILBOXES. CONTRACTOR SHALL ALSO PROVIDE TEMPORARY MAILBOXES.

NOTES

- (A) REMOVE STORM SEWER
- (B) SALVAGE SIGN
- (C) SALVAGE VALVE
- (D) ABANDON STORM SEWER
- (E) SALVAGE & INSTALL BLOCK WALL
- (F) REMOVE WALL
- (G) SALVAGE HYDRANT

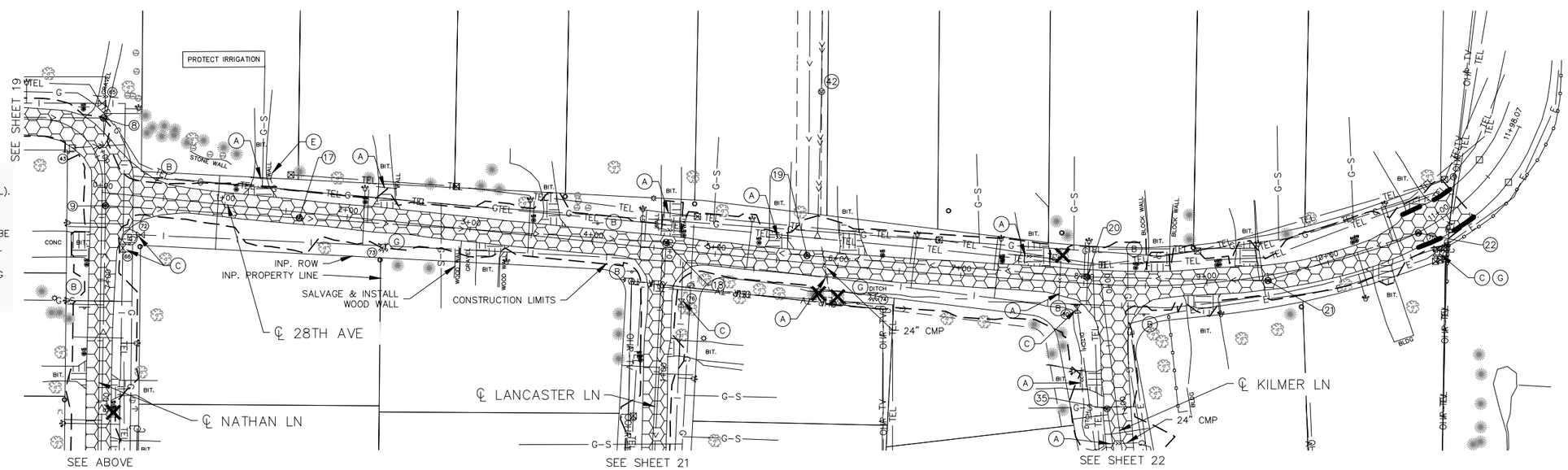

NO	DATE	BY	CKD	APPR	REVISION

I hereby certify that this plan, specification or report was prepared by me or under my direct supervision and that I am a duly Licensed Professional Engineer under the laws of the State of Minnesota.

Signature: MICHAEL J. PAYNE

Date: 3-13-18 License#: 50484

City of Plymouth

PLYMOUTH, MINNESOTA
KILMER PARK STREET RECONSTRUCTION

REMOVALS

NATHAN LANE & 28TH AVE (EAST)

STATE AID PROJECT NO.	DRAWN BY	DATE
----	M. PAYNE	2-18
COUNTY PROJECT NO.	DESIGNED BY	
----	M. PAYNE	2-18
CITY PROJECT NO.	CHECKED BY	
ST189001.001	M. PAYNE	2-18
	REVIEWED BY	
	J. RENNEBERG	2-18

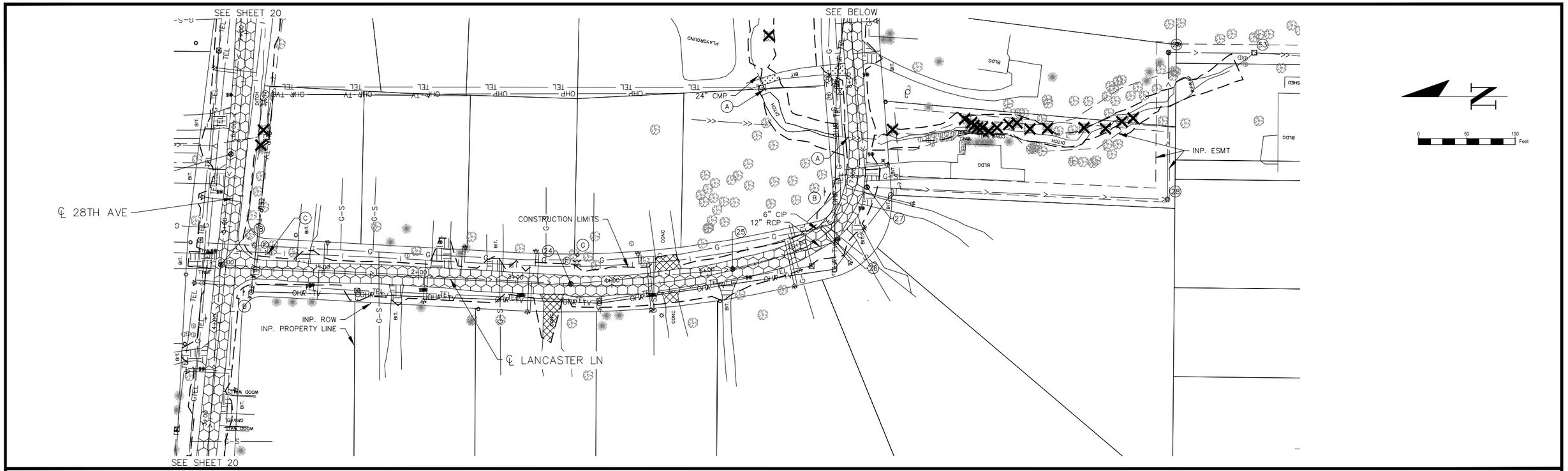

LEGEND

- CLEAR AND GRUB TREE. CONFIRM WITH ENGINEER PRIOR TO REMOVAL
- REMOVE CONCRETE SIDEWALK
- REMOVE BITUMINOUS ROADWAY PAVEMENT
- REMOVE BITUMINOUS TRAIL
- REMOVE CURB
- REMOVE CONCRETE DRIVEWAY
- REMOVE BITUMINOUS DRIVEWAY
- CONSTRUCTION LIMITS

GENERAL NOTES:

1. PROTECT ALL TREES THAT ARE NOT MARKED FOR REMOVAL.
2. TREES TO BE TRIMMED AS DIRECTED BY ENGINEER (INCIDENTAL).
3. TREES AND SHRUBS UNDER 4" IN DIA. TO BE REMOVED ARE NOT SHOWN ON PLANS.
4. TREES TO BE REMOVED MAY NOT BE SHOWN ON PLAN.
5. ALL BITUMINOUS PAVEMENT AND CONCRETE SIDEWALK SHALL BE SAW CUT AT THE MATCH POINT.
6. SAW CUT OF CONCRETE SIDEWALK AND BITUMINOUS PAVEMENT IS INCIDENTAL TO REMOVAL.
7. EXISTING STRUCTURE SCHEDULE SHALL LIST WORK TO EXISTING STRUCTURES. SEE SHEET 41.
8. CONTRACTOR SHALL SALVAGE AND INSTALL ALL MAILBOXES. CONTRACTOR SHALL ALSO PROVIDE TEMPORARY MAILBOXES.

NOTES

- (A) REMOVE STORM SEWER
- (B) SALVAGE SIGN
- (C) SALVAGE VALVE
- (D) ABANDON STORM SEWER
- (E) SALVAGE & INSTALL BLOCK WALL
- (F) REMOVE WALL
- (G) SALVAGE HYDRANT

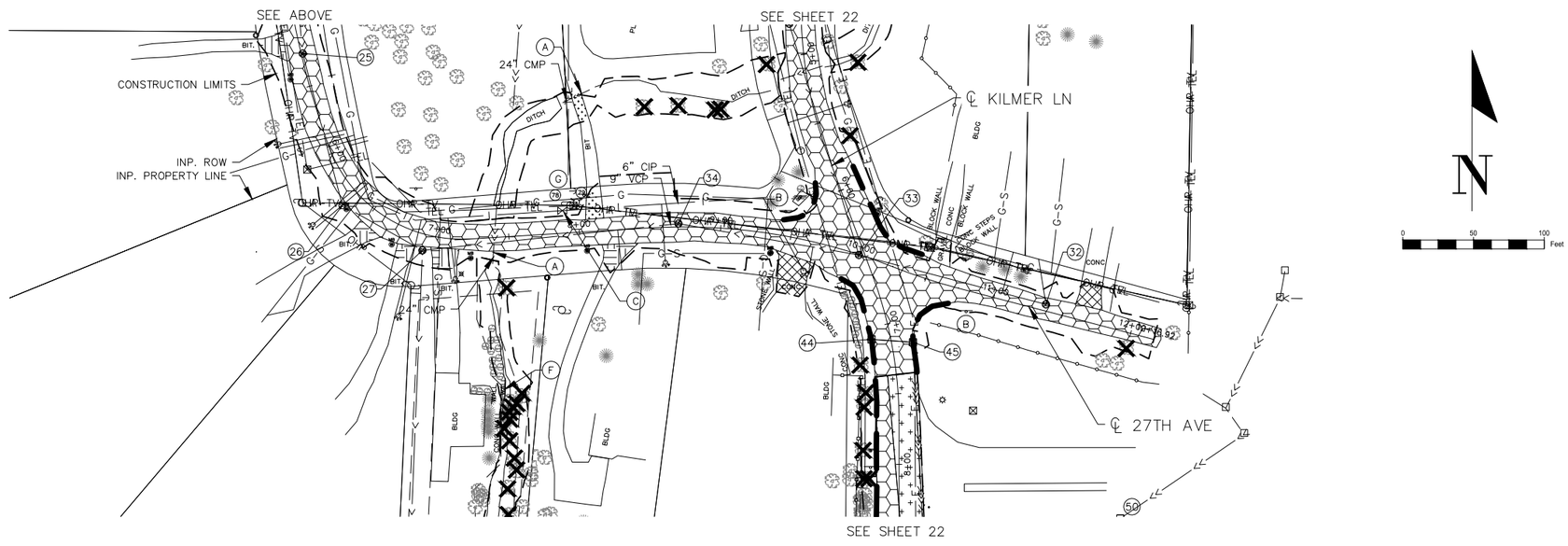

NO	DATE	BY	CKD	APPR	REVISION

I hereby certify that this plan, specification or report was prepared by me or under my direct supervision and that I am a duly Licensed Professional Engineer under the laws of the State of Minnesota.

Signature: MICHAEL J. PAYNE

Date: 3-13-18 License#: 50484

City of Plymouth

PLYMOUTH, MINNESOTA
KILMER PARK STREET RECONSTRUCTION

REMOVALS

LANCASTER LANE & 27TH AVE

STATE AID PROJECT NO.	DRAWN BY	DATE
----	M. PAYNE	2-18
COUNTY PROJECT NO.	DESIGNED BY	
----	M. PAYNE	2-18
CITY PROJECT NO.	CHECKED BY	
ST189001.001	M. PAYNE	2-18
	REVIEWED BY	
	J. RENNEBERG	2-18

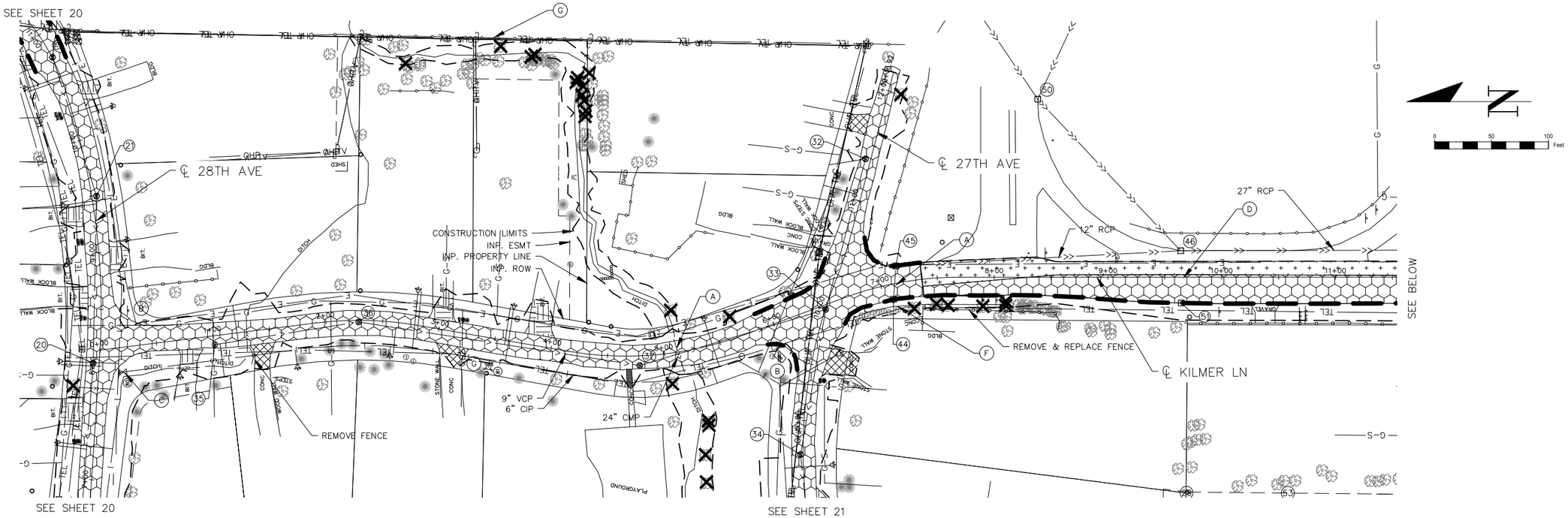

LEGEND

- CLEAR AND GRUB TREE. CONFIRM WITH ENGINEER PRIOR TO REMOVAL
- REMOVE CONCRETE SIDEWALK
- REMOVE BITUMINOUS ROADWAY PAVEMENT
- REMOVE BITUMINOUS TRAIL
- REMOVE CURB
- REMOVE CONCRETE DRIVEWAY
- REMOVE BITUMINOUS DRIVEWAY
- CONSTRUCTION LIMITS

GENERAL NOTES:

1. PROTECT ALL TREES THAT ARE NOT MARKED FOR REMOVAL.
2. TREES TO BE TRIMMED AS DIRECTED BY ENGINEER (INCIDENTAL).
3. TREES AND SHRUBS UNDER 4" IN DIA. TO BE REMOVED ARE NOT SHOWN ON PLANS.
4. TREES TO BE REMOVED MAY NOT BE SHOWN ON PLAN.
5. ALL BITUMINOUS PAVEMENT AND CONCRETE SIDEWALK SHALL BE SAW CUT AT THE MATCH POINT.
6. SAW CUT OF CONCRETE SIDEWALK AND BITUMINOUS PAVEMENT IS INCIDENTAL TO REMOVAL.
7. EXISTING STRUCTURE SCHEDULE SHALL LIST WORK TO EXISTING STRUCTURES. SEE SHEET 41.
8. CONTRACTOR SHALL SALVAGE AND INSTALL ALL MAILBOXES. CONTRACTOR SHALL ALSO PROVIDE TEMPORARY MAILBOXES.

NOTES

- (A) REMOVE STORM SEWER
- (B) SALVAGE SIGN
- (C) SALVAGE VALVE
- (D) ABANDON STORM SEWER
- (E) SALVAGE & INSTALL BLOCK WALL
- (F) REMOVE WALL
- (G) SALVAGE HYDRANT

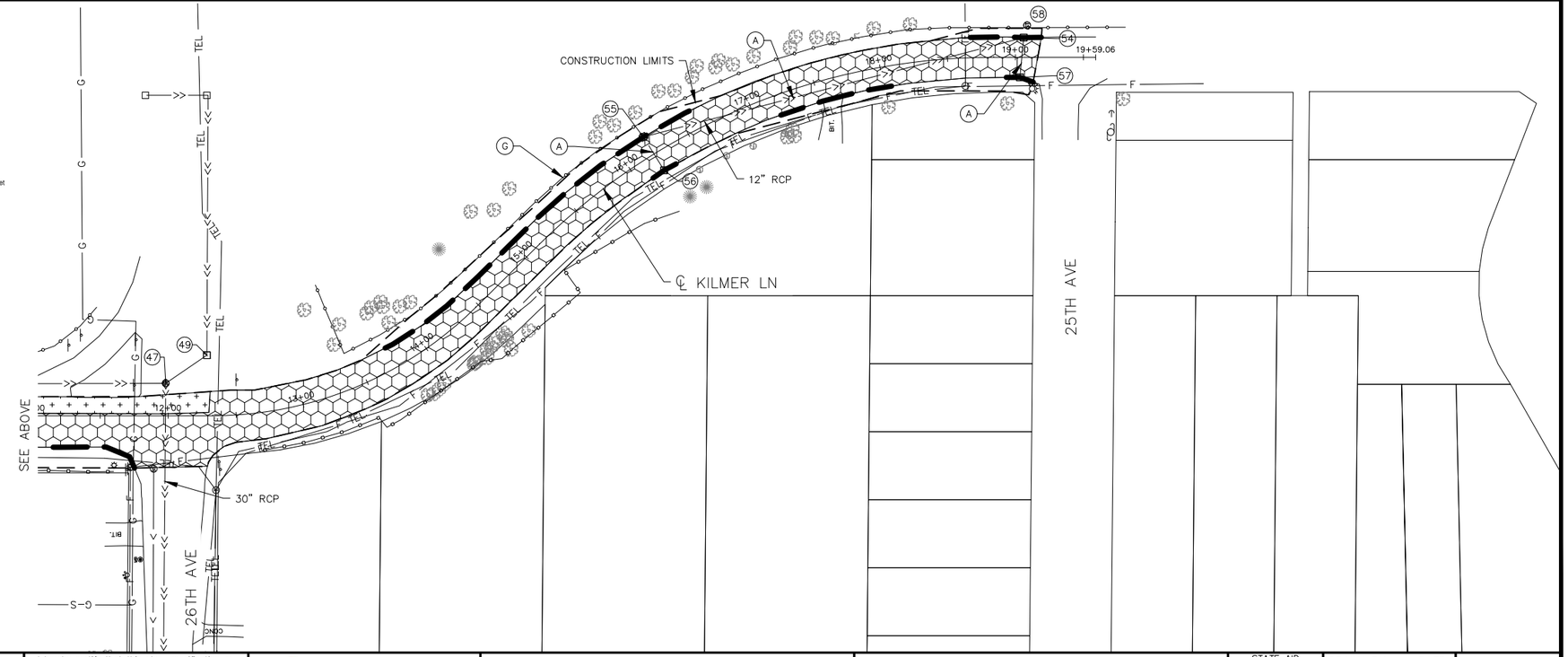

NO	DATE	BY	CKD	APPR	REVISION

I hereby certify that this plan, specification or report was prepared by me or under my direct supervision and that I am a duly Licensed Professional Engineer under the laws of the State of Minnesota.

Signature: MICHAEL J. PAYNE

Date: 3-13-18 License#: 50484

City of Plymouth

PLYMOUTH, MINNESOTA
KILMER PARK STREET RECONSTRUCTION

REMOVALS

KILMER LANE

STATE AID PROJECT NO.	DRAWN BY	DATE
----	M. PAYNE	2-18
COUNTY PROJECT NO.	DESIGNED BY	
----	M. PAYNE	2-18
CITY PROJECT NO.	CHECKED BY	
ST189001.001	M. PAYNE	2-18
	REVIEWED BY	
	J. RENNEBERG	2-18

GENERAL NOTES:
1. ALL DIMENSIONS TO BACK OF CURB UNLESS OTHERWISE NOTED.
2. ALL CURB TO BE B618 UNLESS NOTED OTHERWISE.
3. ROADWAY CROSS SLOPE TO BE 3% UNLESS OTHERWISE NOTED.
4. SEE INTERSECTION SHEETS 31–39 FOR INTERSECTION INFORMATION NOT SHOWN ON THE CONSTRUCTION PLANS.
5. LOCAL ACCESS SHALL BE MAINTAINED AT ALL TIMES.
6. MATCH DRIVEWAYS AS DIRECTED BY ENGINEER.

NOTES
(A) MATCH EXISTING

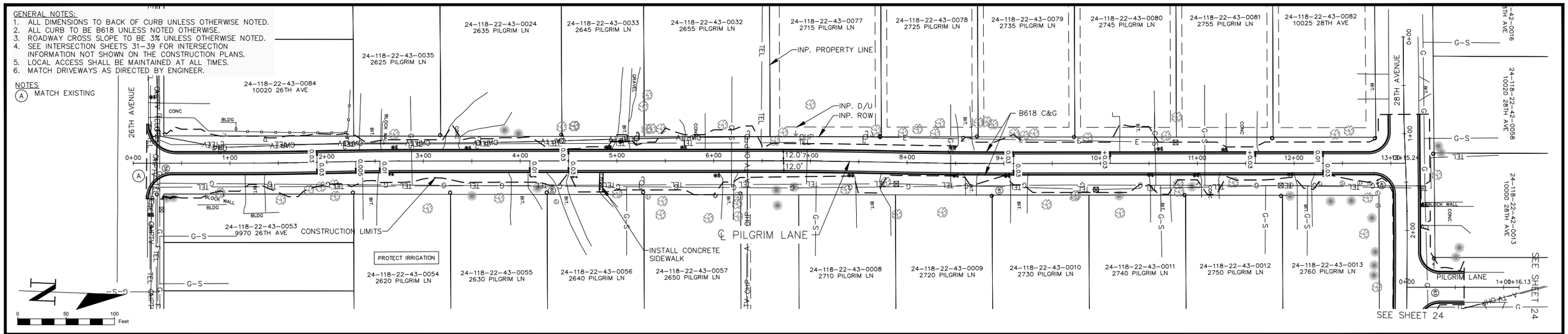

PILGRIM LANE			
CROSS SLOPE			
LEFT LANE		RIGHT LANE	
STATION	e	STATION	e
9+10	-3.00%	1+90	-3.00%
10+10	3.00%	2+30	-0.50%
11+60	3.00%	2+60	-0.50%
12+30	-1.00%	2+70	-1.00%
		4+10	-1.00%
		4+50	-3.00%

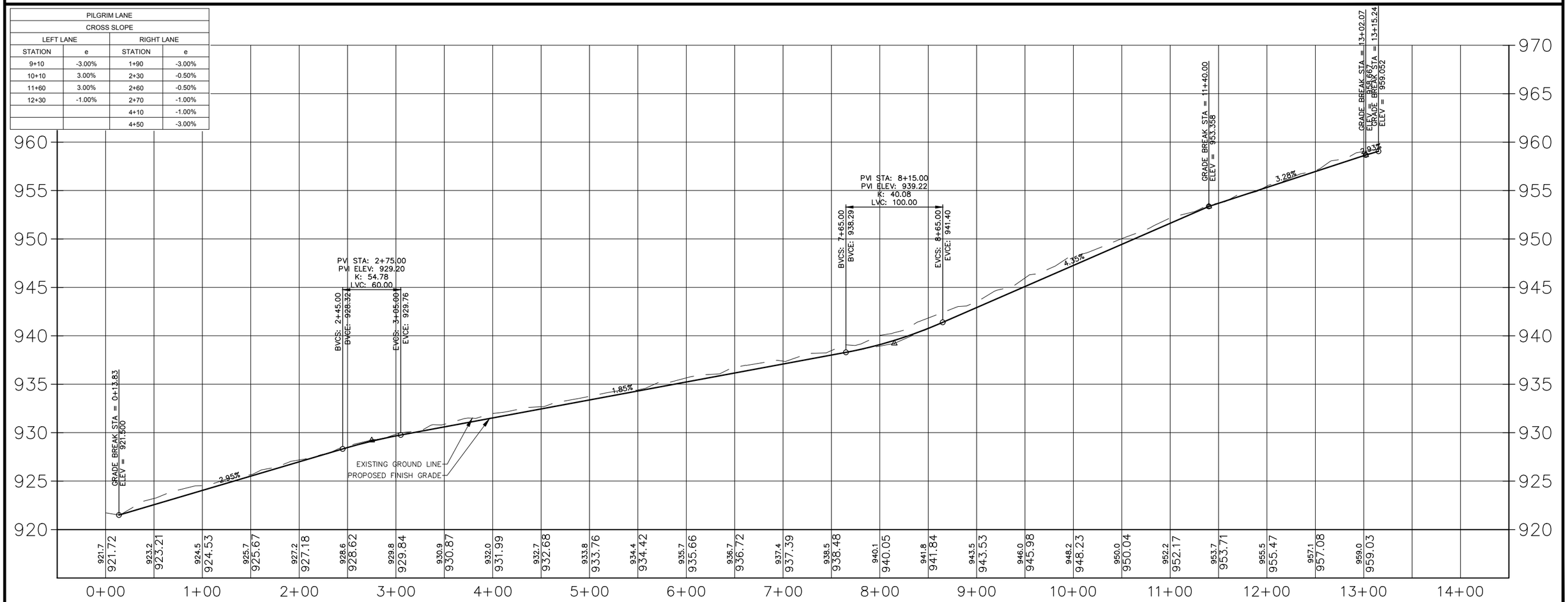

NO	DATE	BY	CKD	APPR	REVISION

I hereby certify that this plan, specification or report was prepared by me or under my direct supervision and that I am a duly Licensed Professional Engineer under the laws of the State of Minnesota.

Signature: MICHAEL J. PAYNE

Date: 3–13–18 License#: 50484

City of Plymouth

PLYMOUTH, MINNESOTA
KILMER PARK STREET RECONSTRUCTION

PLAN & PROFILE

PILGRIM LANE

STATE AID PROJECT NO.	DRAWN BY	DATE
----	M. PAYNE	2–18
COUNTY PROJECT NO.	DESIGNED BY M. PAYNE	2–18
----	CHECKED BY M. PAYNE	2–18
CITY PROJECT NO. ST189001.001	REVIEWED BY J. RENNEBERG	2–18

SHEET 23 OF 106

GENERAL NOTES:
1. ALL DIMENSIONS TO BACK OF CURB UNLESS OTHERWISE NOTED.
2. ALL CURB TO BE B618 UNLESS NOTED OTHERWISE.
3. ROADWAY CROSS SLOPE TO BE 3% UNLESS OTHERWISE NOTED.
4. SEE INTERSECTION SHEETS 31–39 FOR INTERSECTION INFORMATION NOT SHOWN ON THE CONSTRUCTION PLANS.
5. LOCAL ACCESS SHALL BE MAINTAINED AT ALL TIMES.
6. MATCH DRIVEWAYS AS DIRECTED BY ENGINEER.

NOTES
(A) MATCH EXISTING

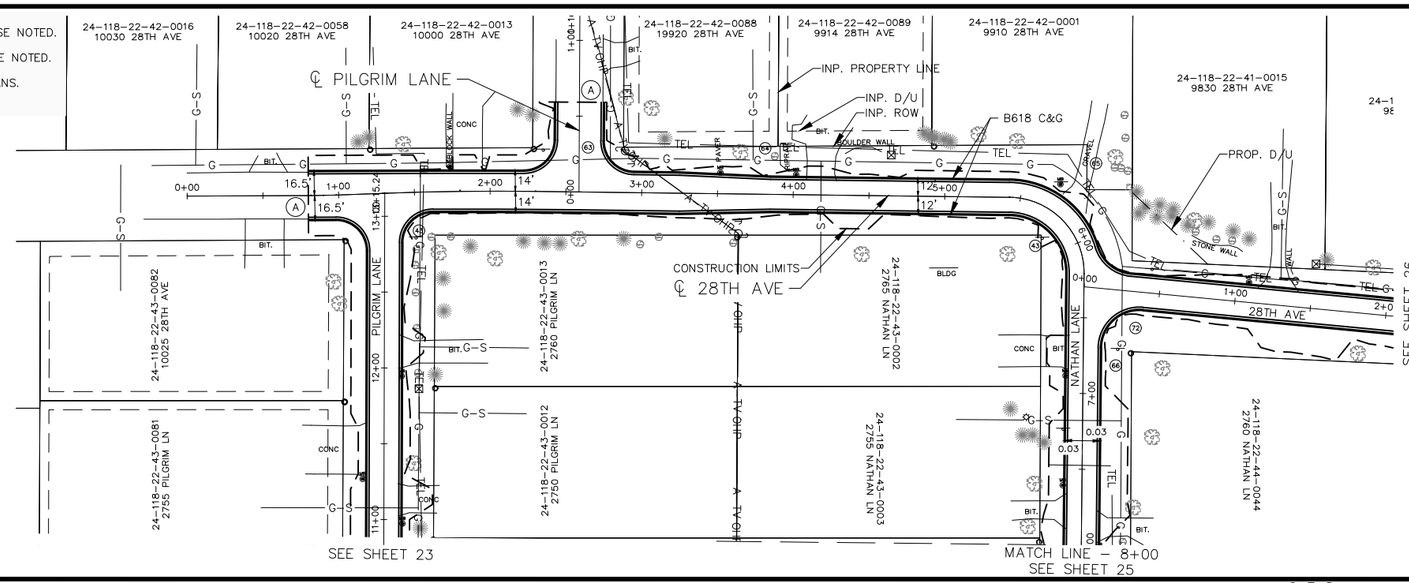

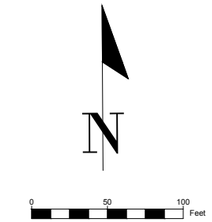

28TH & NATHAN LANE			
CROSS SLOPE			
LEFT LANE		RIGHT LANE	
STATION	e	STATION	e
14+40	-3.00%	8+20	-3.00%
14+80	-0.75%	8+60	-1.00%
15+60	-0.75%	9+40	-1.00%
15+70	-1.00%	9+80	-3.00%

PILGRIM LANE (NORTH) PROFILE

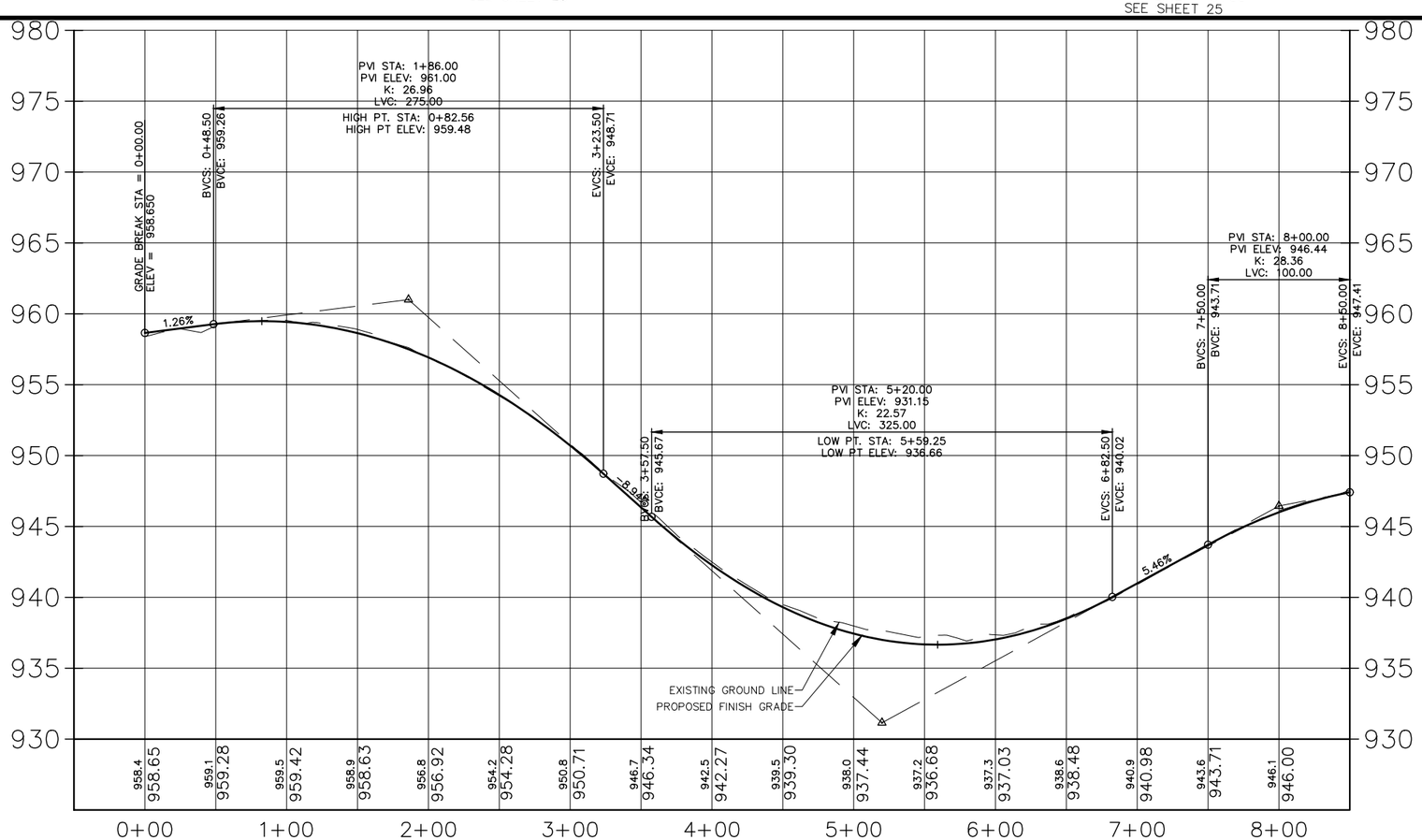

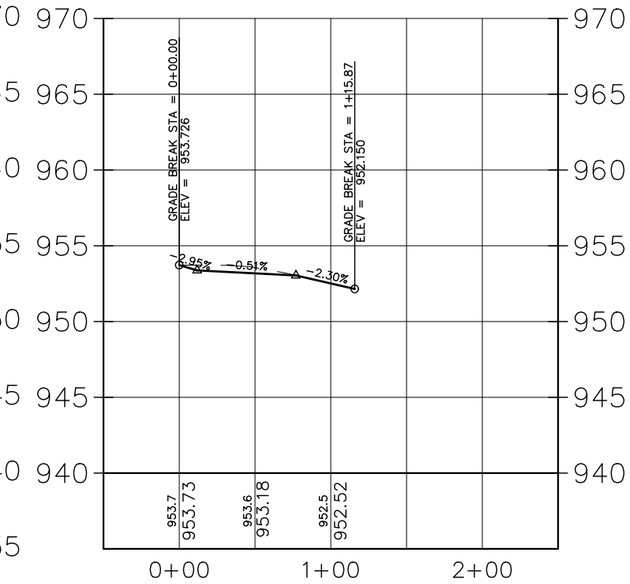

NO	DATE	BY	CKD	APPR	REVISION

I hereby certify that this plan, specification or report was prepared by me or under my direct supervision and that I am a duly Licensed Professional Engineer under the laws of the State of Minnesota.

Signature: MICHAEL J. PAYNE

Date: 3–13–18 License#: 50484

City of Plymouth

PLYMOUTH, MINNESOTA
KILMER PARK STREET RECONSTRUCTION

PLAN & PROFILE

28TH AVE – (WEST)

STATE AID PROJECT NO.	DRAWN BY	DATE
----	M. PAYNE	2–18
COUNTY PROJECT NO.	DESIGNED BY	
----	M. PAYNE	2–18
	CHECKED BY	
CITY PROJECT NO.	M. PAYNE	2–18
ST189001.001	REVIEWED BY	
	J. RENNEBERG	2–18

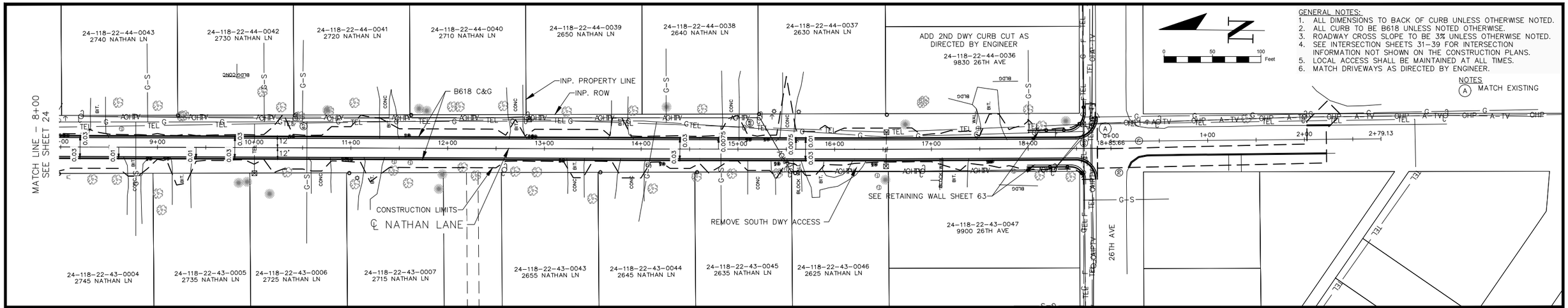

GENERAL NOTES:

1. ALL DIMENSIONS TO BACK OF CURB UNLESS OTHERWISE NOTED.
2. ALL CURB TO BE B618 UNLESS NOTED OTHERWISE.
3. ROADWAY CROSS SLOPE TO BE 3% UNLESS OTHERWISE NOTED.
4. SEE INTERSECTION SHEETS 31–39 FOR INTERSECTION INFORMATION NOT SHOWN ON THE CONSTRUCTION PLANS.
5. LOCAL ACCESS SHALL BE MAINTAINED AT ALL TIMES.
6. MATCH DRIVEWAYS AS DIRECTED BY ENGINEER.

NOTES

(A) MATCH EXISTING

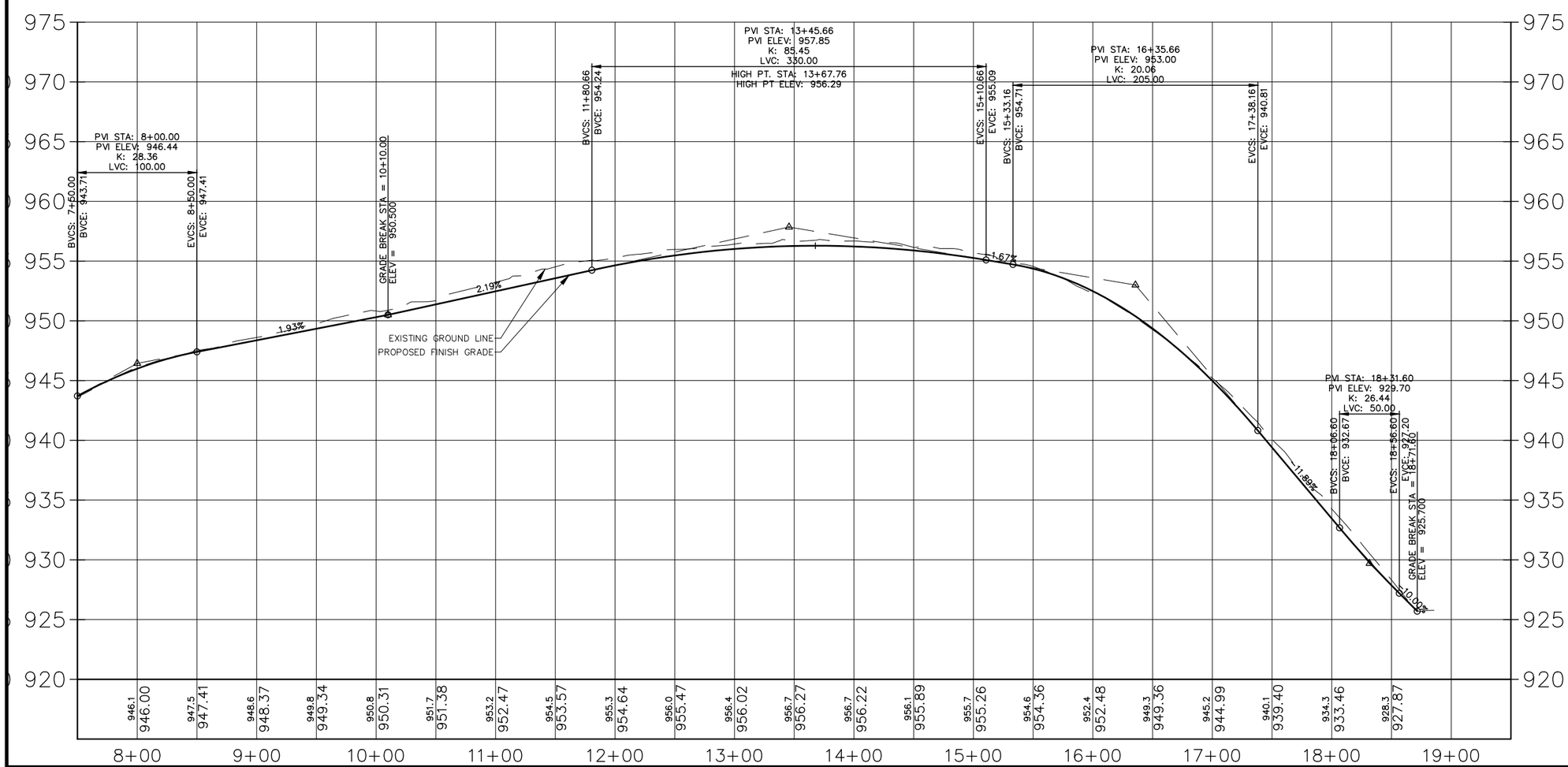

28TH & NATHAN LANE			
CROSS SLOPE			
LEFT LANE		RIGHT LANE	
STATION	e	STATION	e
14+40	-3.00%	8+20	-3.00%
14+80	-0.75%	8+60	-1.00%
15+60	-0.75%	9+40	-1.00%
15+70	-1.00%	9+80	-3.00%

NO	DATE	BY	CKD	APPR	REVISION

I hereby certify that this plan, specification or report was prepared by me or under my direct supervision and that I am a duly Licensed Professional Engineer under the laws of the State of Minnesota.

Signature: MICHAEL J. PAYNE

Date: 3–13–18 License#: 50484

City of Plymouth

PLYMOUTH, MINNESOTA
KILMER PARK STREET
RECONSTRUCTION

PLAN & PROFILE

NATHAN LANE

STATE AID PROJECT NO.	DRAWN BY	DATE
----	M. PAYNE	2–18
COUNTY PROJECT NO.	DESIGNED BY	
----	M. PAYNE	2–18
CITY PROJECT NO.	CHECKED BY	
ST189001.001	M. PAYNE	2–18
	REVIEWED BY	
	J. RENNEBERG	2–18

GENERAL NOTES:
1. ALL DIMENSIONS TO BACK OF CURB UNLESS OTHERWISE NOTED.
2. ALL CURB TO BE B618 UNLESS NOTED OTHERWISE.
3. ROADWAY CROSS SLOPE TO BE 3% UNLESS OTHERWISE NOTED.
4. SEE INTERSECTION SHEETS 31–39 FOR INTERSECTION INFORMATION NOT SHOWN ON THE CONSTRUCTION PLANS.
5. LOCAL ACCESS SHALL BE MAINTAINED AT ALL TIMES.

NOTES
(A) MATCH EXISTING

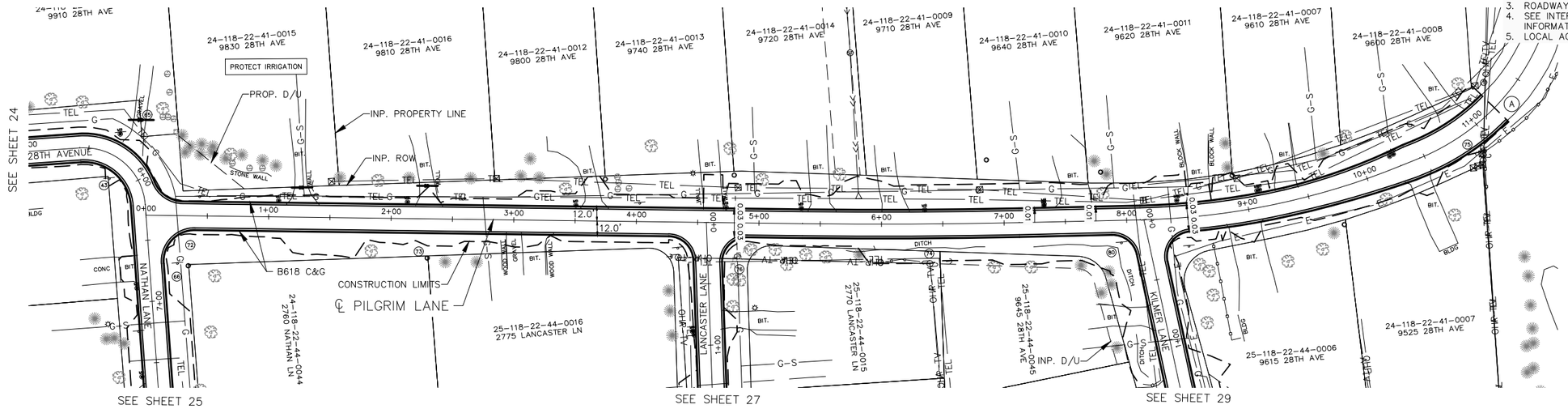

28TH AVE	
CROSS SLOPE	
LEFT LANE	
STATION	e
4+80	-3.00%
5+20	-1.00%
7+75	-1.00%
8+50	-3.00%

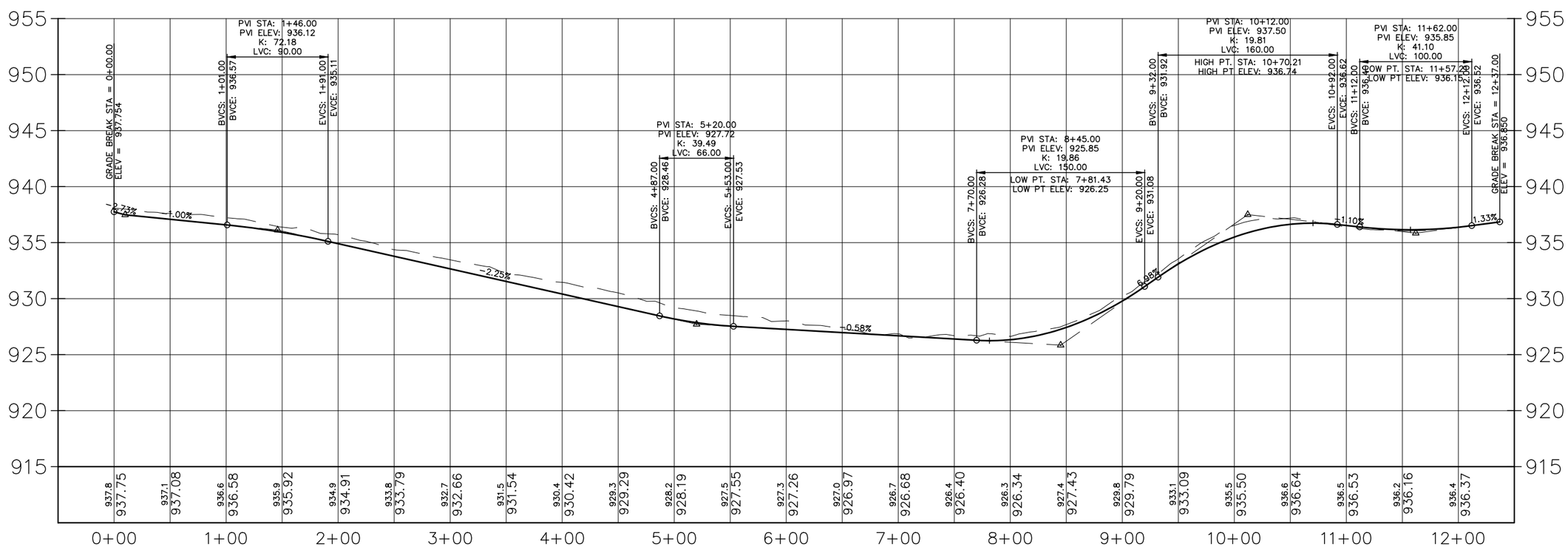

NO	DATE	BY	CKD	APPR	REVISION

I hereby certify that this plan, specification or report was prepared by me or under my direct supervision and that I am a duly Licensed Professional Engineer under the laws of the State of Minnesota.

Signature: MICHAEL J. PAYNE

Date: 3–13–18 License#: 50484

City of Plymouth

PLYMOUTH, MINNESOTA
KILMER PARK STREET RECONSTRUCTION

PLAN & PROFILE

28TH AVE – (EAST)

STATE AID PROJECT NO. ____
COUNTY PROJECT NO. ____
CITY PROJECT NO. ST189001.001

		DATE
DRAWN BY	M. PAYNE	2–18
DESIGNED BY	M. PAYNE	2–18
CHECKED BY	M. PAYNE	2–18
REVIEWED BY	J. RENNEBERG	2–18

GENERAL NOTES:
1. ALL DIMENSIONS TO BACK OF CURB UNLESS OTHERWISE NOTED.
2. ALL CURB TO BE B618 UNLESS NOTED OTHERWISE.
3. ROADWAY CROSS SLOPE TO BE 3% UNLESS OTHERWISE NOTED.
4. SEE INTERSECTION SHEETS 31–36 FOR INTERSECTION INFORMATION NOT SHOWN ON THE CONSTRUCTION PLANS.
5. LOCAL ACCESS SHALL BE MAINTAINED AT ALL TIMES.
6. MATCH DRIVEWAYS AS DIRECTED BY ENGINEER.

NOTES
(A) MATCH EXISTING

LANCASTER LANE & 27TH AVE	
CROSS SLOPE	
LEFT LANE	
STATION	e
1+20	-3.00%
1+60	-1.00%
4+80	-1.00%
5+40	2.00%
6+60	2.00%
7+10	-1.00%

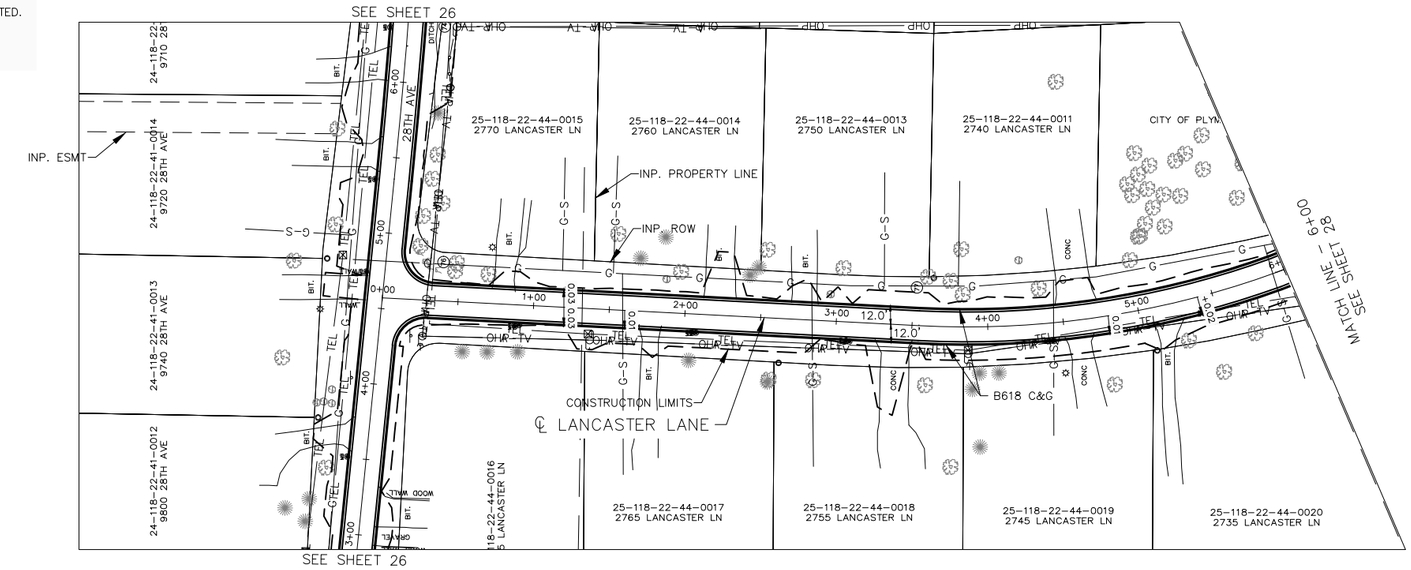

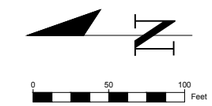

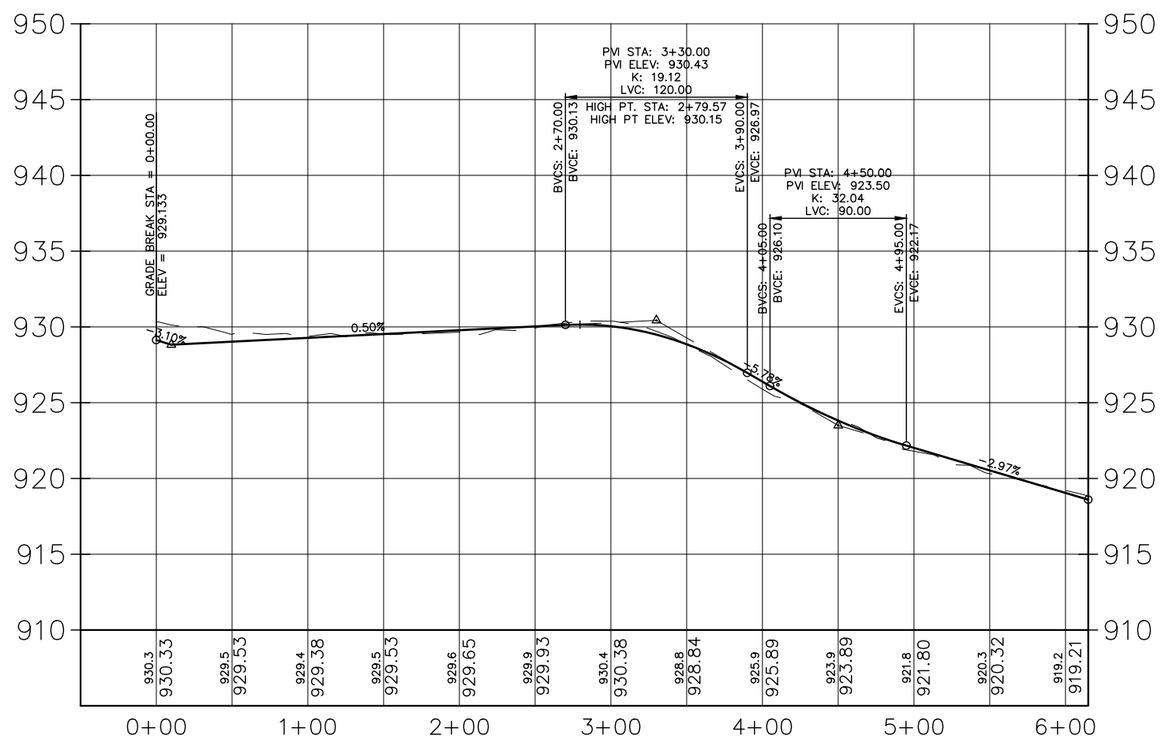

NO	DATE	BY	CKD	APPR	REVISION

I hereby certify that this plan, specification or report was prepared by me or under my direct supervision and that I am a duly Licensed Professional Engineer under the laws of the State of Minnesota.

Signature: MICHAEL J. PAYNE

Date: 3–13–18 License#: 50484

City of Plymouth

PLYMOUTH, MINNESOTA
KILMER PARK STREET RECONSTRUCTION

PLAN & PROFILE

LANCASTER LANE – 0+00 – 6+00

STATE AID PROJECT NO.	DRAWN BY	DATE
----	M. PAYNE	2–18
COUNTY PROJECT NO.	DESIGNED BY M. PAYNE	2–18
----	CHECKED BY M. PAYNE	2–18
CITY PROJECT NO. ST189001.001	REVIEWED BY J. RENNEBERG	2–18

SHEET 27 OF 106

GENERAL NOTES:
1. ALL DIMENSIONS TO BACK OF CURB UNLESS OTHERWISE NOTED.
2. ALL CURB TO BE B618 UNLESS NOTED OTHERWISE.
3. ROADWAY CROSS SLOPE TO BE 3% UNLESS OTHERWISE NOTED.
4. SEE INTERSECTION SHEETS 31–39 FOR INTERSECTION INFORMATION NOT SHOWN ON THE CONSTRUCTION PLANS.
5. LOCAL ACCESS SHALL BE MAINTAINED AT ALL TIMES.
6. MATCH DRIVEWAYS AS DIRECTED BY ENGINEER.
7. DRAINAGE AND STREET GRADING SHALL BE VERIFIED FOR DRAINAGE PRIOR TO PLACEMENT OF CURB AND THEN AGAIN PRIOR TO PAVING. CONTRACTOR SHALL PROVIDE ENGINEER 72 HOURS NOTICE TO VERIFY GRADING AND DRAINAGE.

NOTES:
(A) MATCH EXISTING

LANCASTER LANE & 27TH AVE	
CROSS SLOPE	
LEFT LANE	
STATION	e
1+20	-3.00%
1+60	-1.00%
4+80	-1.00%
5+40	2.00%
6+60	2.00%
7+10	-1.00%

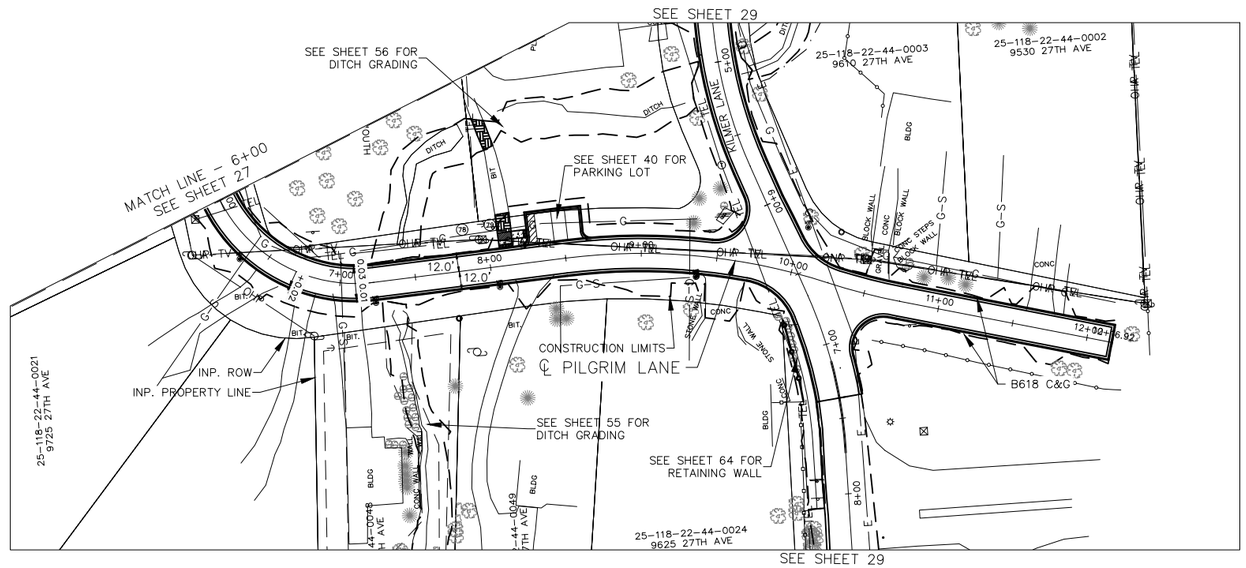

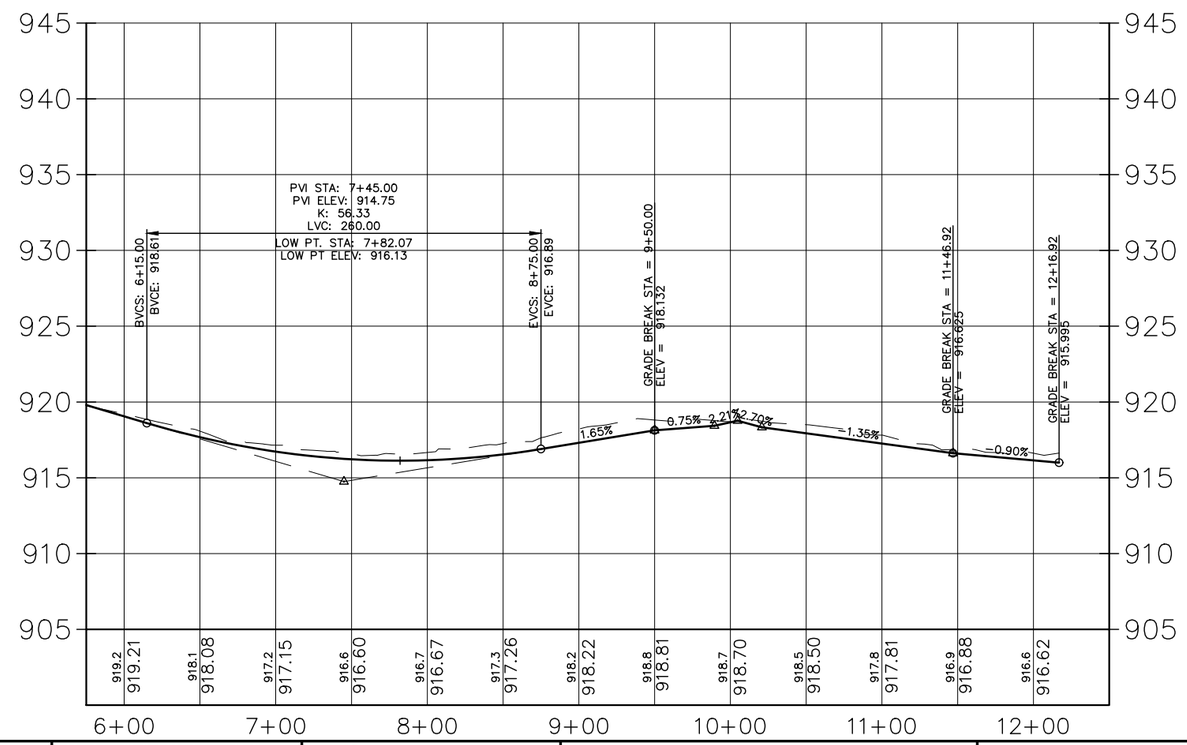

NO	DATE	BY	CKD	APPR	REVISION

I hereby certify that this plan, specification or report was prepared by me or under my direct supervision and that I am a duly Licensed Professional Engineer under the laws of the State of Minnesota.

Signature: MICHAEL J. PAYNE

Date: 3–13–18 License#: 50484

City of Plymouth

PLYMOUTH, MINNESOTA
KILMER PARK STREET RECONSTRUCTION

PLAN & PROFILE

27TH AVE – 6+00 – 12+16.92

STATE AID PROJECT NO.	DRAWN BY	DATE
----	M. PAYNE	2–18
COUNTY PROJECT NO.	DESIGNED BY	
----	M. PAYNE	2–18
CITY PROJECT NO.	CHECKED BY	
ST189001.001	M. PAYNE	2–18
	REVIEWED BY	
	J. RENNEBERG	2–18

GENERAL NOTES:
1. ALL DIMENSIONS TO BACK OF CURB UNLESS OTHERWISE NOTED.
2. ALL CURB TO BE B618 UNLESS NOTED OTHERWISE.
3. ROADWAY CROSS SLOPE TO BE 3% UNLESS OTHERWISE NOTED.
4. SEE INTERSECTION SHEETS 31–39 FOR INTERSECTION INFORMATION NOT SHOWN ON THE CONSTRUCTION PLANS.
5. LOCAL ACCESS SHALL BE MAINTAINED AT ALL TIMES.

NOTES
(A) MATCH EXISTING
(B) INSTALL 24" WHITE STOP BLOCK

KILMER LANE	
CROSS SLOPE	
RIGHT LANE	
STATION	e
1+60	-3.00%
2+00	-1.00%
3+30	-1.00%
3+70	-3.00%

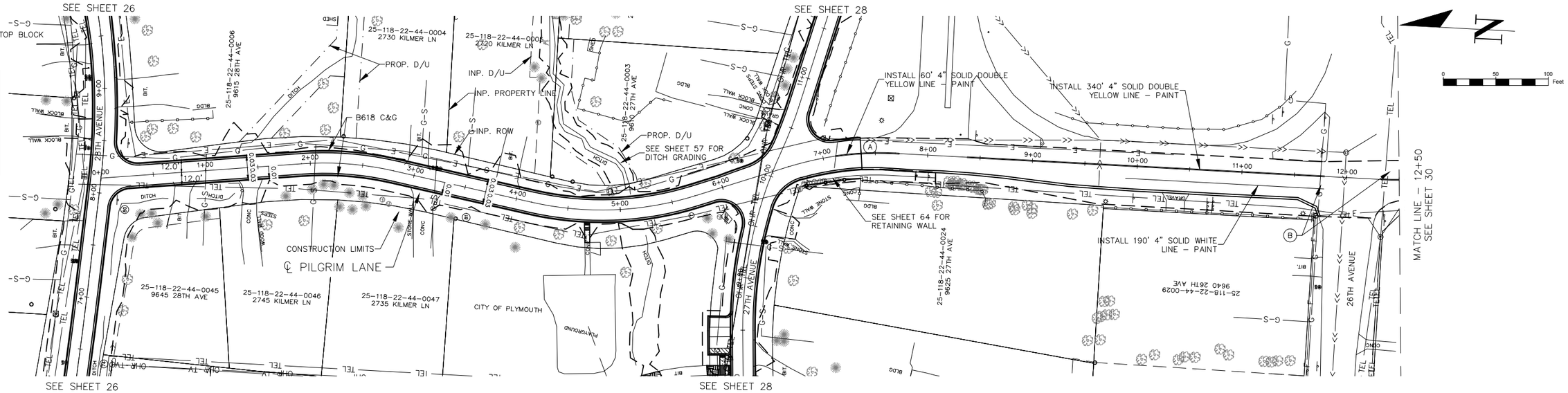

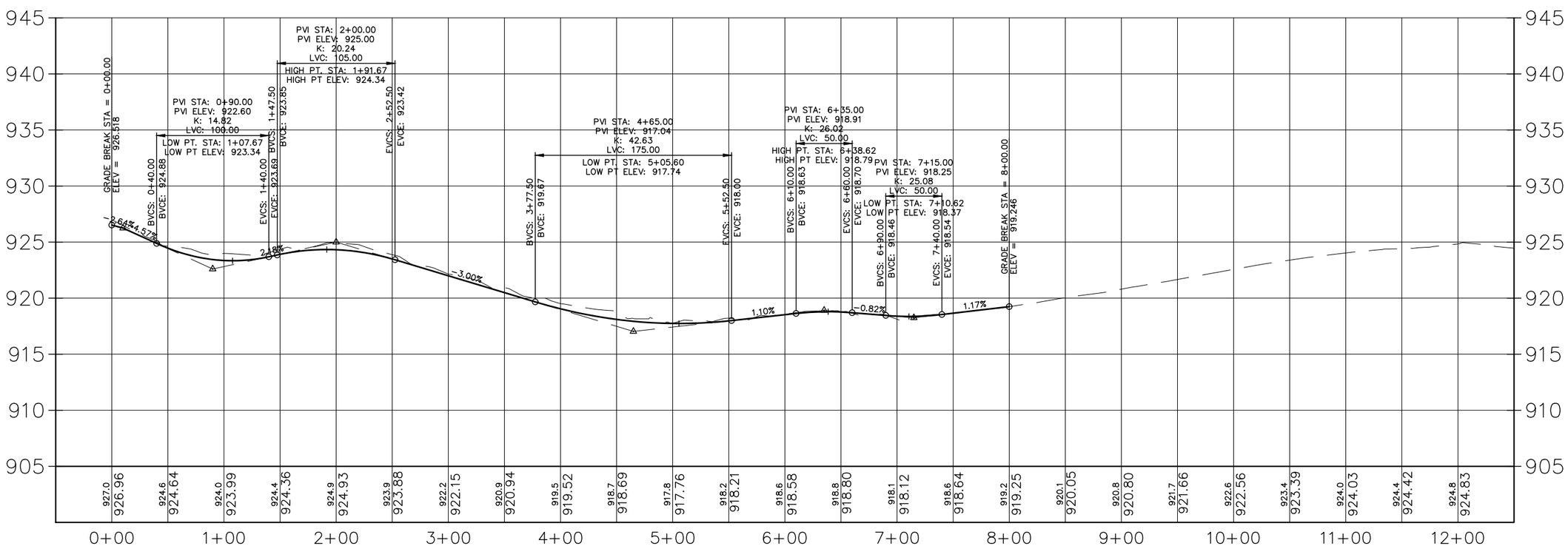

NO	DATE	BY	CKD	APPR	REVISION

I hereby certify that this plan, specification or report was prepared by me or under my direct supervision and that I am a duly Licensed Professional Engineer under the laws of the State of Minnesota.

Signature: MICHAEL J. PAYNE

Date: 3–13–18 License#: 50484

City of Plymouth

PLYMOUTH, MINNESOTA
KILMER PARK STREET RECONSTRUCTION

PLAN & PROFILE

KILMER LANE – 0+00 – 12+50

STATE AID PROJECT NO.	----
COUNTY PROJECT NO.	----
CITY PROJECT NO.	ST189001.001

		DATE
DRAWN BY	M. PAYNE	2–18
DESIGNED BY	M. PAYNE	2–18
CHECKED BY	M. PAYNE	2–18
REVIEWED BY	J. RENNEBERG	2–18

GENERAL NOTES:
1. ALL DIMENSIONS TO BACK OF CURB UNLESS OTHERWISE NOTED.
2. ALL CURB TO BE B618 UNLESS NOTED OTHERWISE.
3. ROADWAY CROSS SLOPE TO BE 3% UNLESS OTHERWISE NOTED.
4. SEE INTERSECTION SHEETS 31–39 FOR INTERSECTION INFORMATION NOT SHOWN ON THE CONSTRUCTION PLANS.
5. LOCAL ACCESS SHALL BE MAINTAINED AT ALL TIMES.

NOTES
(A) MATCH EXISTING
(B) INSTALL 24" WHITE STOP BLOCK

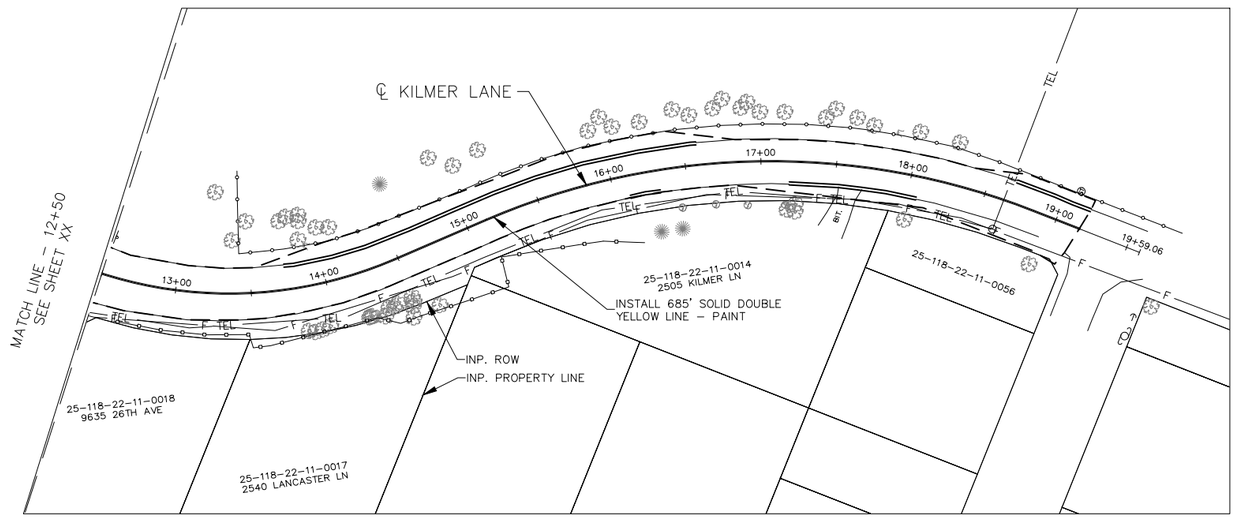

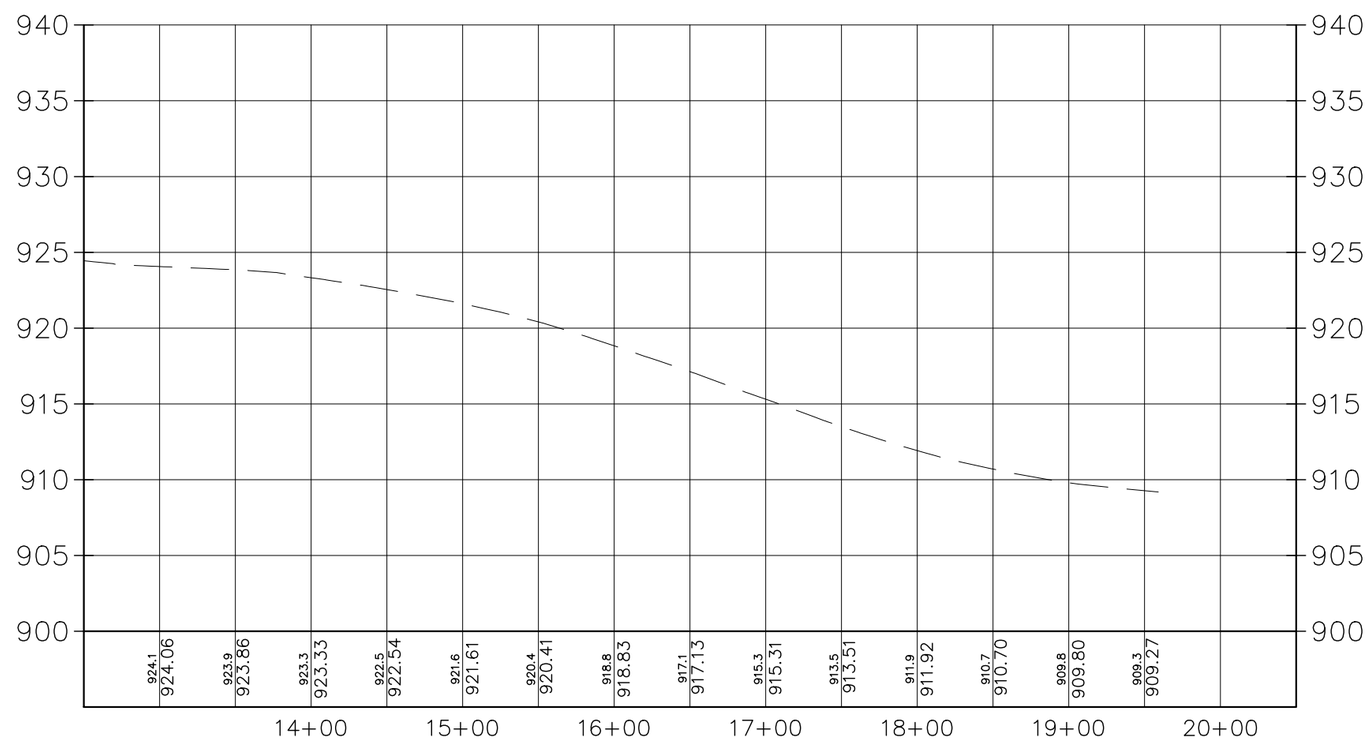

NO	DATE	BY	CKD	APPR	REVISION

I hereby certify that this plan, specification or report was prepared by me or under my direct supervision and that I am a duly Licensed Professional Engineer under the laws of the State of Minnesota.

Signature: MICHAEL J. PAYNE

Date: 3–13–18 License#: 50484

City of Plymouth

PLYMOUTH, MINNESOTA
KILMER PARK STREET RECONSTRUCTION

PLAN & PROFILE

KILMER LANE – 12+50 – 19+59.06

STATE AID PROJECT NO.	DRAWN BY	DATE
----	M. PAYNE	2–18
COUNTY PROJECT NO.	DESIGNED BY	
----	M. PAYNE	2–18
CITY PROJECT NO.	CHECKED BY	
ST189001.001	M. PAYNE	2–18
	REVIEWED BY	
	J. RENNEBERG	2–18

LEGEND

- DIRECTION OF CURB FLOW LINE
- PROPOSED STORM SEWER
- PROPOSED CATCH BASIN
- EXISTING CATCH BASIN
- EXISTING STORM SEWER MANHOLE
- EXISTING STORM SEWER

GENERAL NOTES:

1. ALL CURB ALIGNMENTS AND PROFILE ALIGNMENTS ARE AT LIP OF CURB.
2. PROPOSED STORM SEWER INFORMATION SHOWN ON SHEETS 42–54.
3. ADDITIONAL EXISTING STORM SEWER INFORMATION SHOWN ON REMOVALS SHEETS 19–22 AND EXISTING STRUCTURE SCHEDULE SHEET 41.

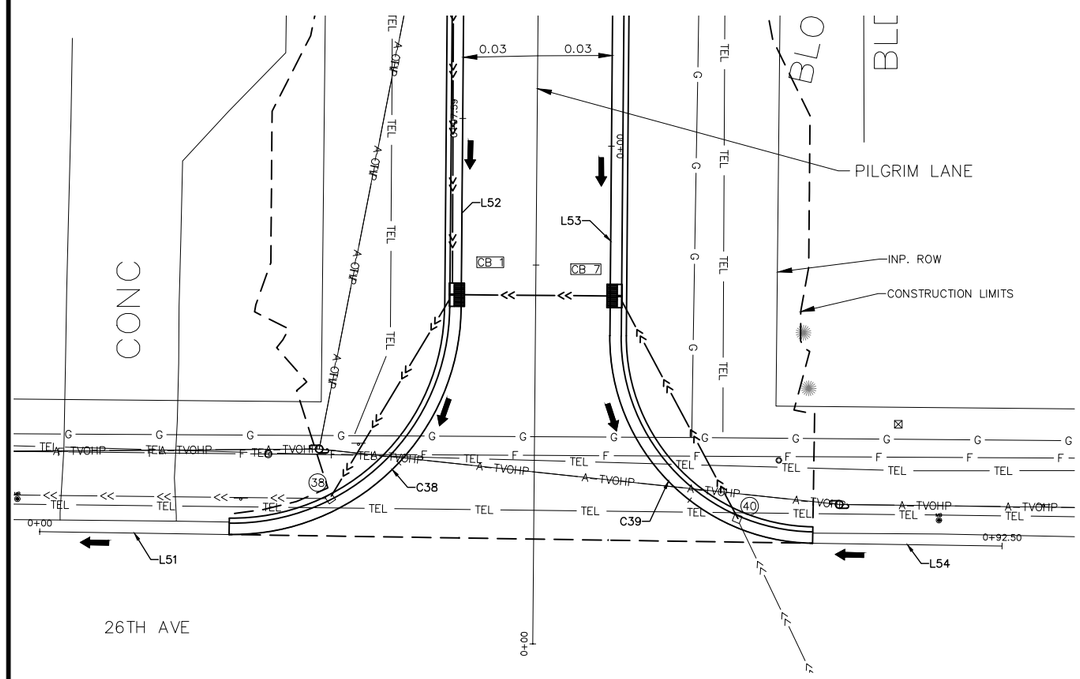

PILGRIM LN & 26TH AVE – SW

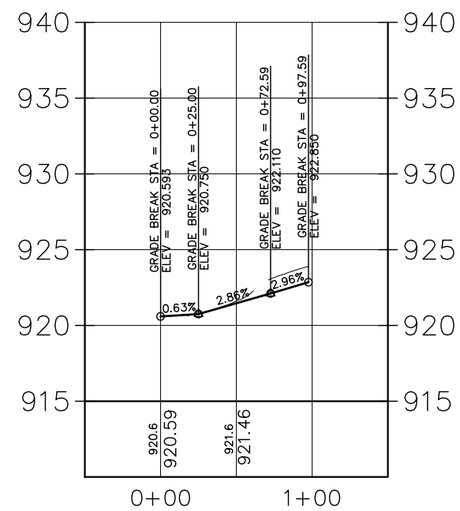

PILGRIM LN & 26TH AVE – SE

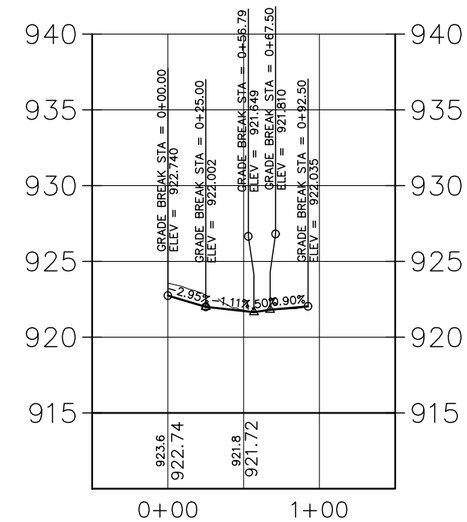

CURB RETURN – PILGRIM LN & 26TH AVE – SW										
SEGMENT NUMBER	BEGIN STATION	DELTA	DEGREE	RADIUS	TANGENT	LENGTH	X	Y	AZIMUTH	END STATION
L51	0+00.00					25.000	493686.7519	178920.2383	90° 51' 23.02"	0+25.00
C38	0+25.00	90°22'12.92"	189°54'35.19"	30.17	30.366	47.586	493711.7491	178919.8646	90° 51' 23.02" 0° 29' 10.10"	0+72.59
L52	0+72.59					25.000	493742.3690	178949.7753	0° 29' 10.10"	0+97.59

CURB RETURN – PILGRIM LN & 26TH AVE – SE										
SEGMENT NUMBER	BEGIN STATION	DELTA	DEGREE	RADIUS	TANGENT	LENGTH	X	Y	AZIMUTH	END STATION
L53	0+00.00					25.000	493762.2107	178971.1100	180° 29' 10.10"	0+25.00
C39	0+25.00	89°37'47.08"	210°52'43.81"	27.17	26.995	42.503	493761.9986	178946.1109	180° 29' 10.10" 90° 51' 23.02"	0+67.50
L54	0+67.50					25.000	493788.7615	178918.7134	90° 51' 23.02"	0+92.50

NO	DATE	BY	CKD	APPR	REVISION

I hereby certify that this plan, specification or report was prepared by me or under my direct supervision and that I am a duly Licensed Professional Engineer under the laws of the State of Minnesota.

Signature: MICHAEL J. PAYNE

Date: 3–13–18 License#: 50484

City of Plymouth

PLYMOUTH, MINNESOTA
KILMER PARK STREET RECONSTRUCTION

INTERSECTION DETAILS
PILGRIM LANE & 26TH AVE

STATE AID PROJECT NO. ----
COUNTY PROJECT NO. ----
CITY PROJECT NO. ST189001.001

		DATE
DRAWN BY	M. PAYNE	2–18
DESIGNED BY	M. PAYNE	2–18
CHECKED BY	M. PAYNE	2–18
REVIEWED BY	J. RENNEBERG	2–18

LEGEND

- DIRECTION OF CURB FLOW LINE
- PROPOSED STORM SEWER
- PROPOSED CATCH BASIN
- EXISTING CATCH BASIN
- EXISTING STORM SEWER MANHOLE
- EXISTING STORM SEWER

GENERAL NOTES:

1. ALL CURB ALIGNMENTS AND PROFILE ALIGNMENTS ARE AT LIP OF CURB.
2. PROPOSED STORM SEWER INFORMATION SHOWN ON SHEETS 42–54.
3. ADDITIONAL EXISTING STORM SEWER INFORMATION SHOWN ON REMOVALS SHEETS 19–22 AND EXISTING STRUCTURE SCHEDULE SHEET 41.

N

0 10 20 Feet

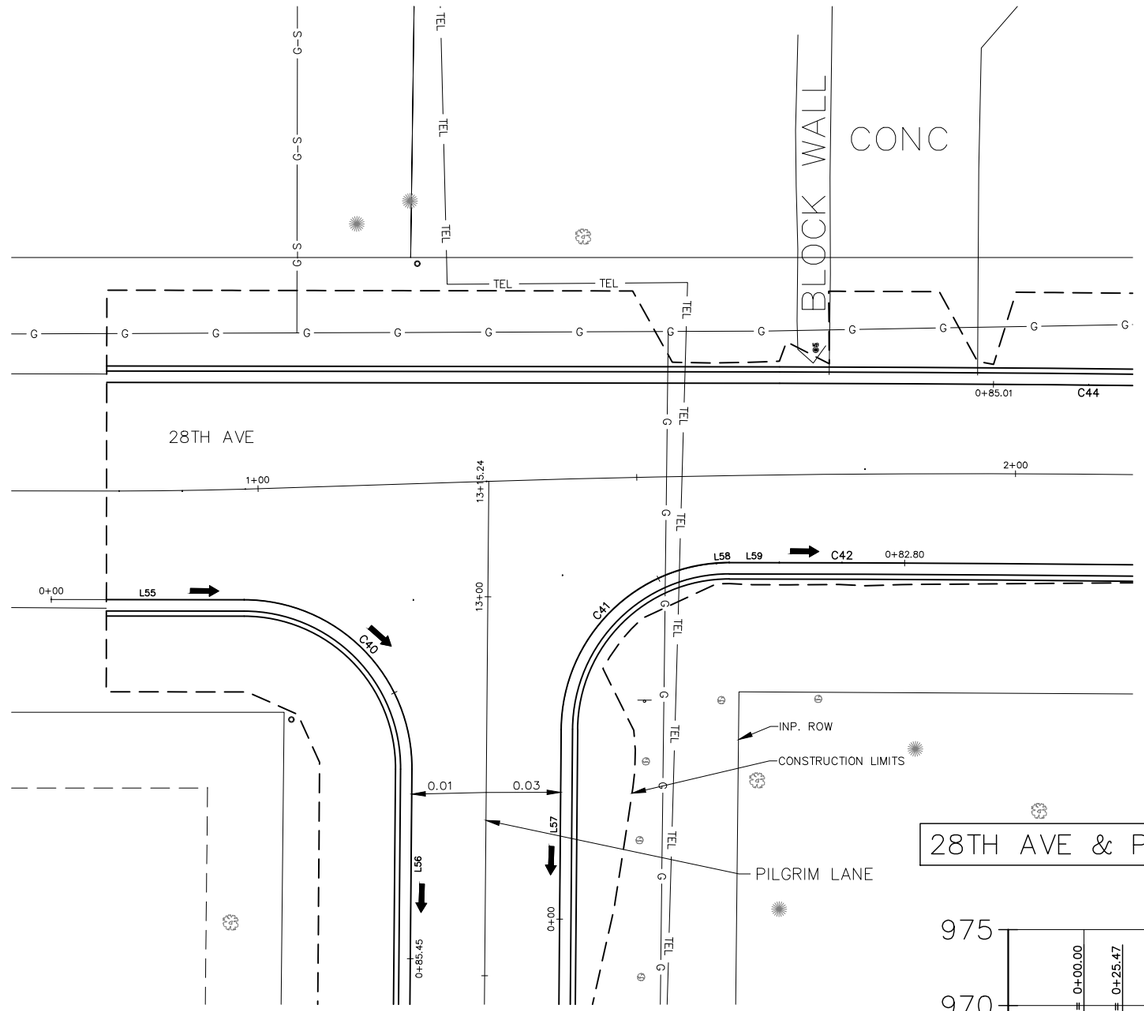

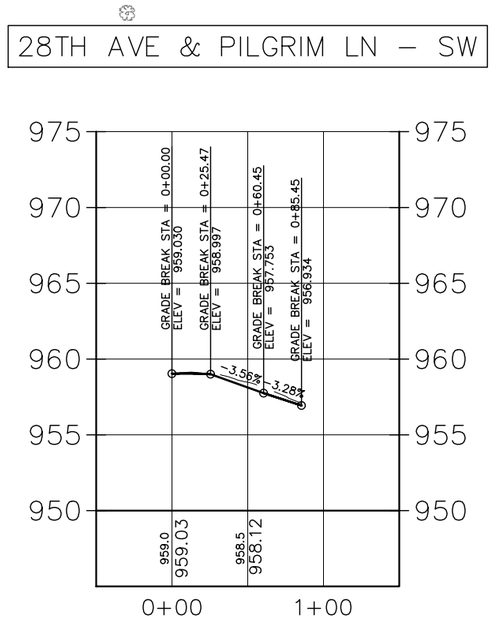

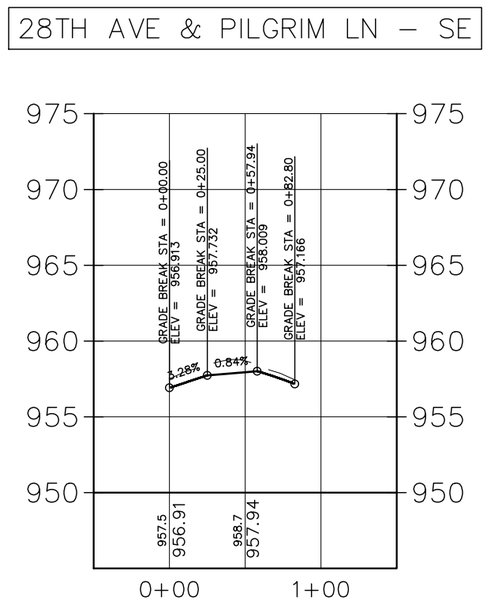

CURB RETURN – 28TH AVE & PILGRIM LN – SW

SEGMENT NUMBER	BEGIN STATION	DELTA	DEGREE	RADIUS	TANGENT	LENGTH	X	Y	AZIMUTH	END STATION
L55	0+00.00					25.466	493706.2260	180204.9793	90° 04' 55.66"	0+25.47
C40	0+25.47	90°24'14.44"	258°26'18.02"	22.17	22.327	34.981	493731.6919	180204.9428	90° 04' 55.66" 180° 29' 10.10"	0+60.45
L56	0+60.45					25.000	493753.8293	180182.5847	180° 29' 10.10"	0+85.45

CURB RETURN – 28TH AVE & PILGRIM LN – SE

SEGMENT NUMBER	BEGIN STATION	DELTA	DEGREE	RADIUS	TANGENT	LENGTH	X	Y	AZIMUTH	END STATION
L57	0+00.00					25.000	493773.3222	180162.8004	0° 29' 10.10"	0+25.00
C41	0+25.00	85°07'59.70"	258°26'18.02"	22.17	20.363	32.941	493773.5343	180187.7995	0° 29' 10.10" 85° 37' 09.81"	0+57.94
L58	0+57.94					1.701	493794.0101	180209.7167	85° 37' 09.81"	0+59.64
L59	0+59.64					6.618	493795.7064	180209.8466	90° 02' 38.83"	0+66.26
C42	0+66.26	0°11'23.94"	1°08'55.08"	4988.17	8.270	16.540	493802.3246	180209.8415	90° 04' 55.66" 90° 16' 19.61"	0+82.80

NO	DATE	BY	CKD	APPR	REVISION

I hereby certify that this plan, specification or report was prepared by me or under my direct supervision and that I am a duly Licensed Professional Engineer under the laws of the State of Minnesota.

Signature: MICHAEL J. PAYNE

Date: 3–13–18 License#: 50484

City of Plymouth

PLYMOUTH, MINNESOTA
KILMER PARK STREET RECONSTRUCTION

INTERSECTION DETAILS
PILGRIM LANE & 28TH AVE

STATE AID PROJECT NO. ----
COUNTY PROJECT NO. ----
CITY PROJECT NO. ST189001.001

		DATE
DRAWN BY	M. PAYNE	2–18
DESIGNED BY	M. PAYNE	2–18
CHECKED BY	M. PAYNE	2–18
REVIEWED BY	J. RENNEBERG	2–18

LEGEND

- DIRECTION OF CURB FLOW LINE
- PROPOSED STORM SEWER
- PROPOSED CATCH BASIN
- EXISTING CATCH BASIN
- EXISTING STORM SEWER MANHOLE
- EXISTING STORM SEWER

GENERAL NOTES:

1. ALL CURB ALIGNMENTS AND PROFILE ALIGNMENTS ARE AT LIP OF CURB.
2. PROPOSED STORM SEWER INFORMATION SHOWN ON SHEETS 42–54.
3. ADDITIONAL EXISTING STORM SEWER INFORMATION SHOWN ON REMOVALS SHEETS 19–22 AND EXISTING STRUCTURE SCHEDULE SHEET 41.

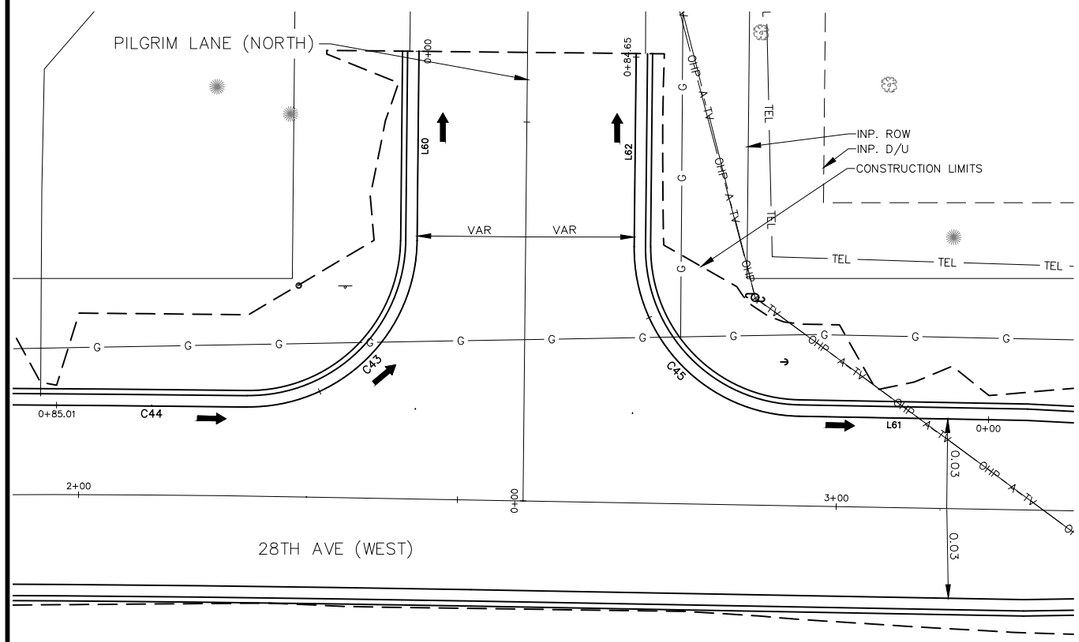

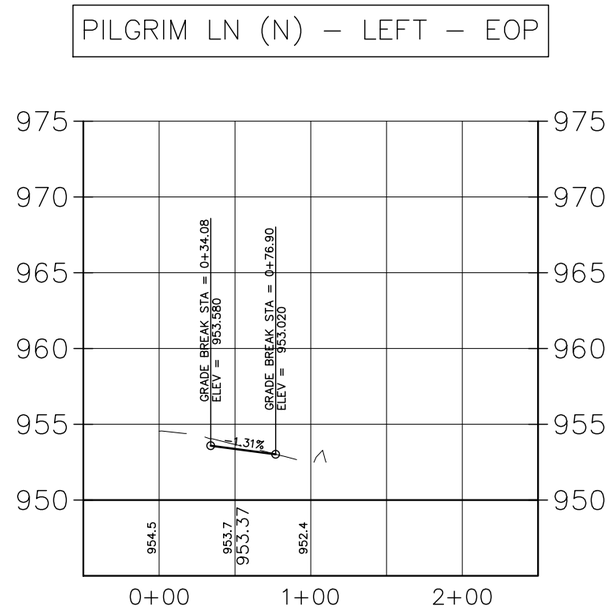

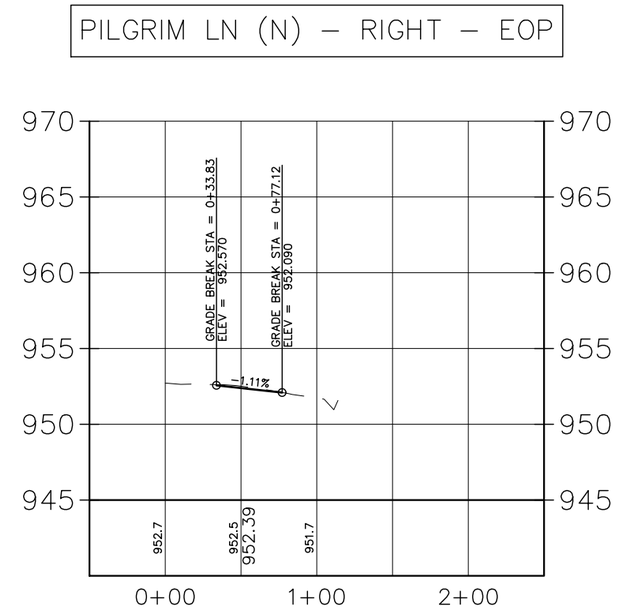

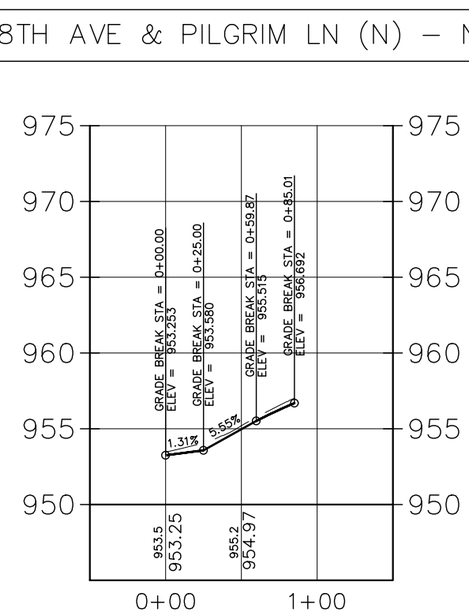

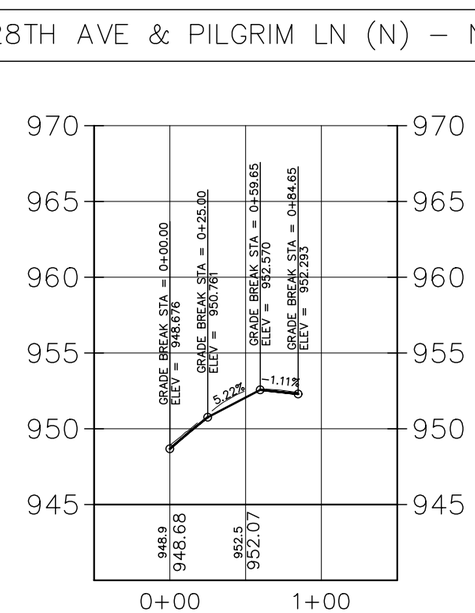

CURB RETURN – 28TH AVE & PILGRIM LN (N) – NW

SEGMENT NUMBER	BEGIN STATION	DELTA	DEGREE	RADIUS	TANGENT	LENGTH	X	Y	AZIMUTH	END STATION
L60	0+00.00					25.000	493878.4261	180280.0811	180° 35' 09.64"	0+25.00
C43	0+25.00	90°06'22.77"	258°26'18.02"	22.17	22.211	34.866	493878.1704	180255.0824	180° 35' 09.64" 270° 41' 32.41"	0+59.87
C44	0+59.87	0°17'14.95"	1°08'35.56"	5011.83	12.574	25.147	493855.7337	180233.1408	270° 41' 32.41" 270° 24' 17.46"	0+85.01

CURB RETURN – 28TH AVE & PILGRIM LN (N) – NE

SEGMENT NUMBER	BEGIN STATION	DELTA	DEGREE	RADIUS	TANGENT	LENGTH	X	Y	AZIMUTH	END STATION
L61	0+00.00					25.000	493953.5884	180231.4629	271° 02' 05.08"	0+25.00
C45	0+25.00	89°33'04.56"	258°26'18.02"	22.17	21.997	34.651	493928.5925	180231.9143	271° 02' 05.08" 0° 35' 09.64"	0+59.65
L62	0+59.65					25.000	493906.8240	180254.3075	0° 35' 09.64"	0+84.65

NO	DATE	BY	CKD	APPR	REVISION

I hereby certify that this plan, specification or report was prepared by me or under my direct supervision and that I am a duly Licensed Professional Engineer under the laws of the State of Minnesota.

Signature: MICHAEL J. PAYNE

Date: 3–13–18 License#: 50484

City of Plymouth

PLYMOUTH, MINNESOTA
KILMER PARK STREET RECONSTRUCTION

INTERSECTION DETAILS
PILGRIM LANE (N) & 28TH AVE

STATE AID PROJECT NO. ----	DRAWN BY M. PAYNE	DATE 2–18
COUNTY PROJECT NO. ----	DESIGNED BY M. PAYNE	2–18
CITY PROJECT NO. ST189001.001	CHECKED BY M. PAYNE	2–18
	REVIEWED BY J. RENNEBERG	2–18

LEGEND

- DIRECTION OF CURB FLOW LINE
- PROPOSED STORM SEWER
- PROPOSED CATCH BASIN
- EXISTING CATCH BASIN
- EXISTING STORM SEWER MANHOLE
- EXISTING STORM SEWER

GENERAL NOTES:

1. ALL CURB ALIGNMENTS AND PROFILE ALIGNMENTS ARE AT LIP OF CURB.
2. PROPOSED STORM SEWER INFORMATION SHOWN ON SHEETS 42–54.
3. ADDITIONAL EXISTING STORM SEWER INFORMATION SHOWN ON REMOVALS SHEETS 19–22 AND EXISTING STRUCTURE SCHEDULE SHEET 41.

N

0 10 20 Feet

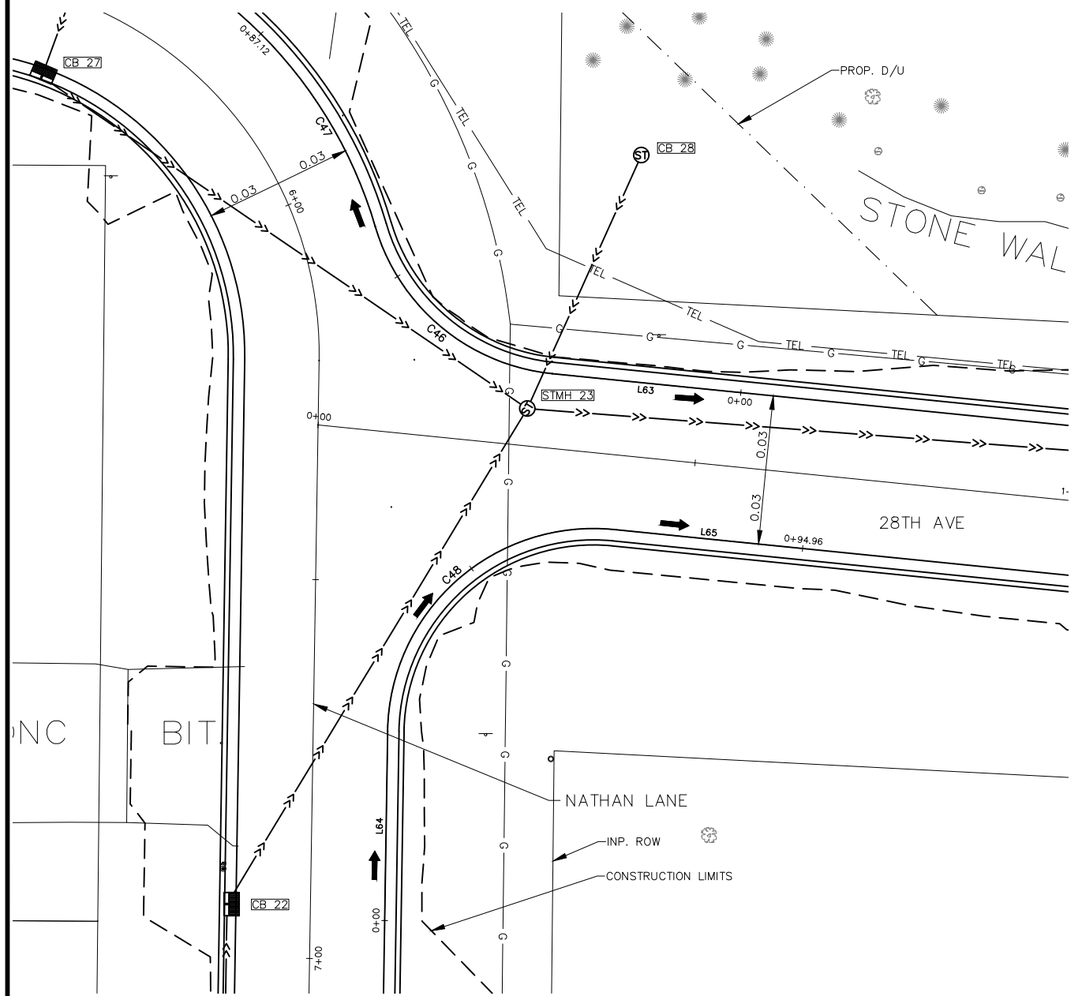

28TH AVE & NATHAN LN – NE

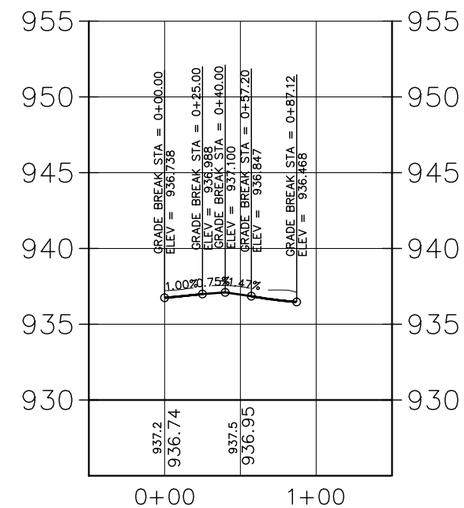

28TH AVE & NATHAN LN – SE

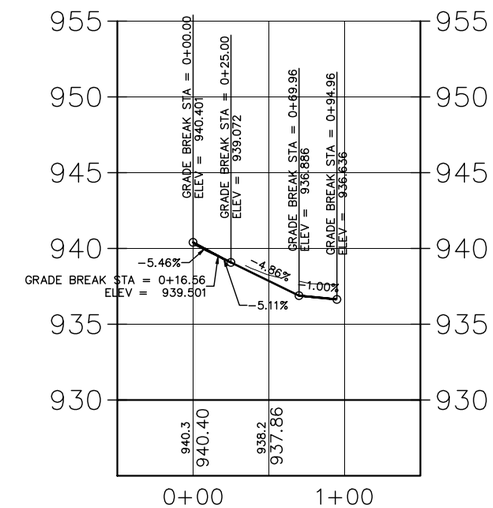

CURB RETURN – 28TH AVE & NATHAN LN – NE

SEGMENT NUMBER	BEGIN STATION	DELTA	DEGREE	RADIUS	TANGENT	LENGTH	X	Y	AZIMUTH	END STATION
L63	0+00.00					25.000	494280.8159	180160.5848	275° 44' 10.63"	0+25.00
C46	0+25.00	67°54'34.31"	210°52'43.81"	27.17	18.295	32.203	494255.9411	180163.0835	275° 44' 10.63" 343° 38' 44.94"	0+57.20
C47	0+57.20	28°38'52.40"	95°45'51.47"	59.83	15.277	29.915	494232.5860	180182.4671	343° 38' 44.94" 314° 59' 52.53"	0+87.12

CURB RETURN – 28TH AVE & NATHAN LN – SE

SEGMENT NUMBER	BEGIN STATION	DELTA	DEGREE	RADIUS	TANGENT	LENGTH	X	Y	AZIMUTH	END STATION
L64	0+00.00					25.000	494233.8153	180090.9104	0° 55' 10.35"	0+25.00
C48	0+25.00	94°49'00.28"	210°52'43.81"	27.17	29.556	44.963	494234.2166	180115.9072	0° 55' 10.35" 95° 44' 10.63"	0+69.96
L65	0+69.96					25.000	494264.0987	180142.5051	95° 44' 10.63"	0+94.96

NO	DATE	BY	CKD	APPR	REVISION

I hereby certify that this plan, specification or report was prepared by me or under my direct supervision and that I am a duly Licensed Professional Engineer under the laws of the State of Minnesota.

Signature: MICHAEL J. PAYNE

Date: 3–13–18 License#: 50484

City of Plymouth

PLYMOUTH, MINNESOTA
KILMER PARK STREET RECONSTRUCTION

INTERSECTION DETAILS
NATHAN LANE & 28TH AVE

STATE AID PROJECT NO. ____	DRAWN BY M. PAYNE	DATE 2–18
COUNTY PROJECT NO. ____	DESIGNED BY M. PAYNE	2–18
CITY PROJECT NO. ST189001.001	CHECKED BY M. PAYNE	2–18
	REVIEWED BY J. RENNEBERG	2–18

LEGEND

- DIRECTION OF CURB FLOW LINE
- PROPOSED STORM SEWER
- PROPOSED CATCH BASIN
- EXISTING CATCH BASIN
- EXISTING STORM SEWER MANHOLE
- EXISTING STORM SEWER

GENERAL NOTES:

1. ALL CURB ALIGNMENTS AND PROFILE ALIGNMENTS ARE AT LIP OF CURB.
2. PROPOSED STORM SEWER INFORMATION SHOWN ON SHEETS 42–54.
3. ADDITIONAL EXISTING STORM SEWER INFORMATION SHOWN ON REMOVALS SHEETS 19–22 AND EXISTING STRUCTURE SCHEDULE SHEET 41.

N

0 10 20 Feet

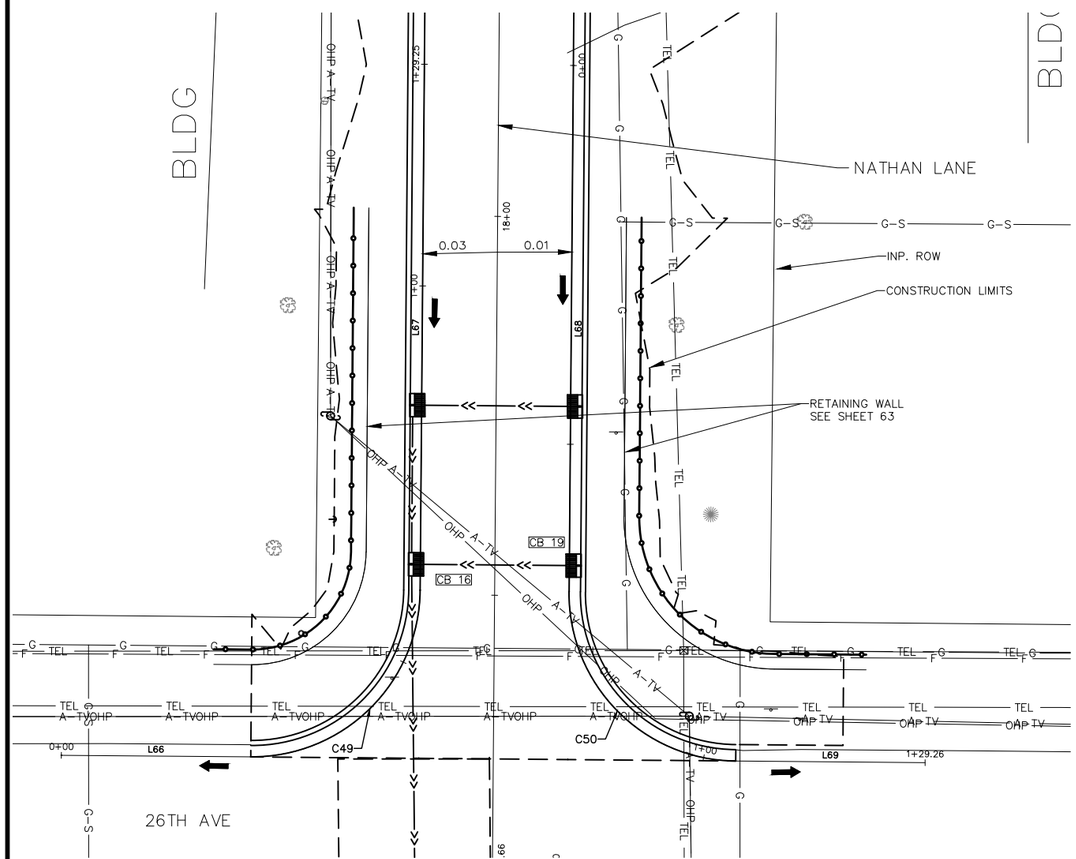

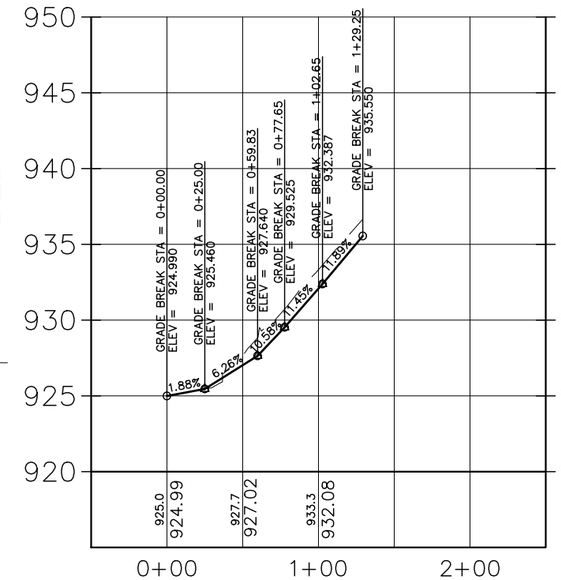

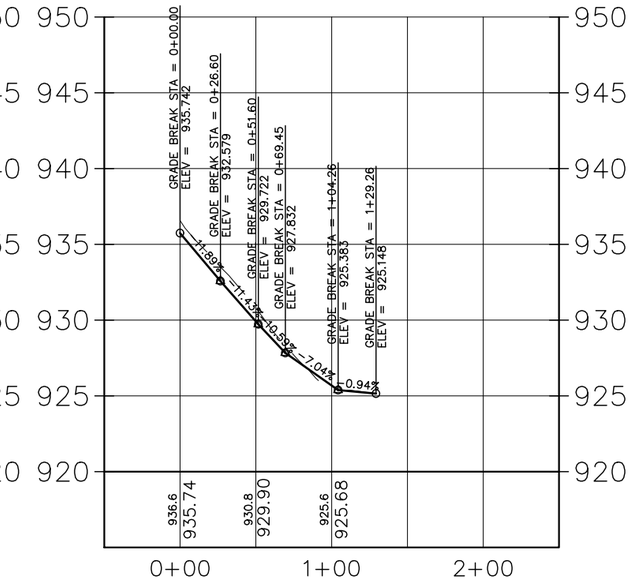

CURB RETURN – NATHAN LN & 26TH AVE – SW										
SEGMENT NUMBER	BEGIN STATION	DELTA	DEGREE	RADIUS	TANGENT	LENGTH	X	Y	AZIMUTH	END STATION
L66	0+00.00					25.000	494150.3519	178914.9108	90° 29' 10.24"	0+25.00
C49	0+25.00	90°01'30.33"	258°26'18.02"	22.17	22.180	34.834	494175.3510	178914.6986	90° 29' 10.24" 0° 27' 39.91"	0+59.83
L67	0+59.83					69.418	494197.7084	178936.6894	0° 27' 39.91"	1+29.25

CURB RETURN – NATHAN LN & 26TH AVE – SE										
SEGMENT NUMBER	BEGIN STATION	DELTA	DEGREE	RADIUS	TANGENT	LENGTH	X	Y	AZIMUTH	END STATION
L68	0+00.00					69.446	494217.9264	179005.9473	180° 27' 39.91"	0+69.45
C50	0+69.45	89°58'29.67"	258°26'18.02"	22.17	22.160	34.815	494217.3675	178936.5032	180° 27' 39.91" 90° 29' 10.24"	1+04.26
L69	1+04.26					25.000	494239.3487	178914.1556	90° 29' 10.24"	1+29.26

NO	DATE	BY	CKD	APPR	REVISION

I hereby certify that this plan, specification or report was prepared by me or under my direct supervision and that I am a duly Licensed Professional Engineer under the laws of the State of Minnesota.

Signature: MICHAEL J. PAYNE

Date: 3–13–18 License#: 50484

City of Plymouth

PLYMOUTH, MINNESOTA
KILMER PARK STREET RECONSTRUCTION

INTERSECTION DETAILS
NATHAN LANE & 26TH AVE

STATE AID PROJECT NO.	DRAWN BY	DATE
----	M. PAYNE	2–18
COUNTY PROJECT NO.	DESIGNED BY	
----	M. PAYNE	2–18
CITY PROJECT NO.	CHECKED BY	
ST189001.001	M. PAYNE	2–18
	REVIEWED BY	
	J. RENNEBERG	2–18

LEGEND

- DIRECTION OF CURB FLOW LINE
- PROPOSED STORM SEWER
- PROPOSED CATCH BASIN
- EXISTING CATCH BASIN
- EXISTING STORM SEWER MANHOLE
- EXISTING STORM SEWER

GENERAL NOTES:

1. ALL CURB ALIGNMENTS AND PROFILE ALIGNMENTS ARE AT LIP OF CURB.
2. PROPOSED STORM SEWER INFORMATION SHOWN ON SHEETS 42–54.
3. ADDITIONAL EXISTING STORM SEWER INFORMATION SHOWN ON REMOVALS SHEETS 19–22 AND EXISTING STRUCTURE SCHEDULE SHEET 41.

N

0 10 20 Feet

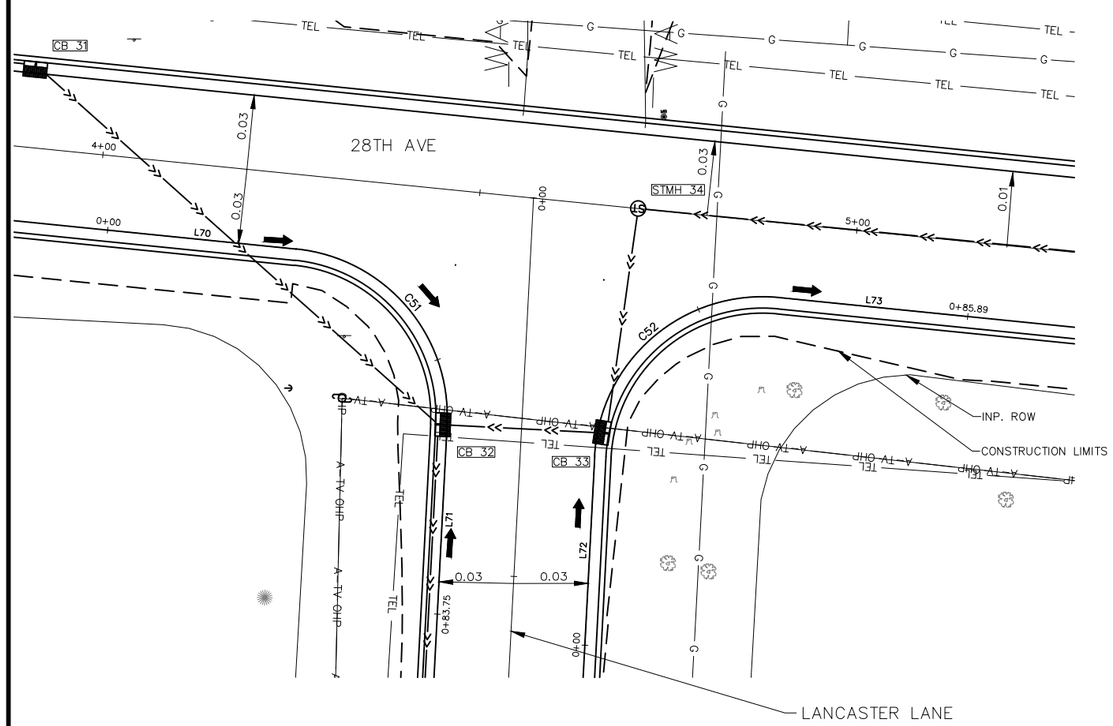

28TH AVE & LANCASTER LN – SW

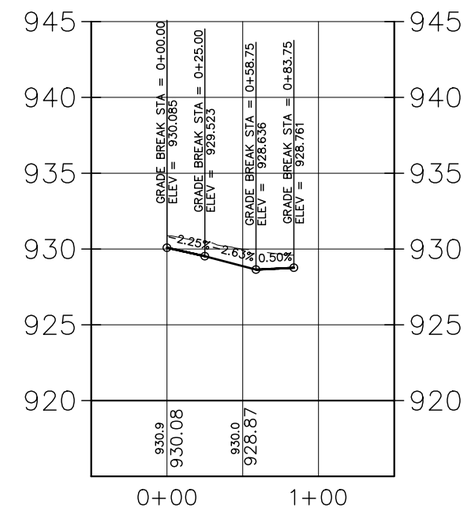

28TH AVE & LANCASTER LN – SE

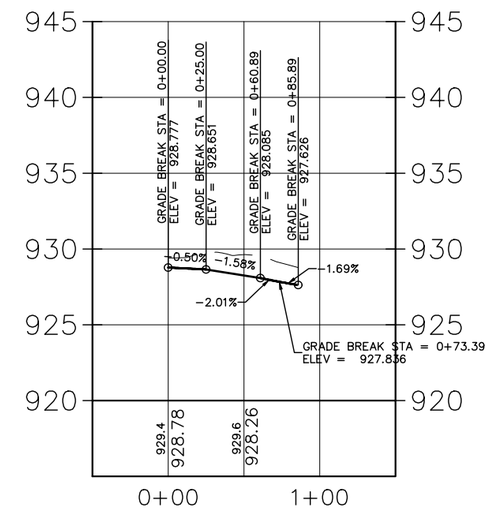

CURB RETURN – 28TH AVE & LANCASTER LN – SW

SEGMENT NUMBER	BEGIN STATION	DELTA	DEGREE	RADIUS	TANGENT	LENGTH	X	Y	AZIMUTH	END STATION
L70	0+00.00					25.000	494623.6611	180106.3860	95° 44' 10.63"	0+25.00
C51	0+25.00	87°14'08.86"	258°26'18.02"	22.17	21.125	33.755	494648.5360	180103.8873	95° 44' 10.63" 182° 58' 19.49"	0+58.75
L71	0+58.75					25.000	494668.4603	180080.6788	182° 58' 19.49"	0+83.75

CURB RETURN – 28TH AVE & LANCASTER LN – SE

SEGMENT NUMBER	BEGIN STATION	DELTA	DEGREE	RADIUS	TANGENT	LENGTH	X	Y	AZIMUTH	END STATION
L72	0+00.00					25.000	494686.6374	180051.6072	2° 58' 19.49"	0+25.00
C52	0+25.00	92°45'51.14"	258°26'18.02"	22.17	23.266	35.894	494687.9336	180076.5736	2° 58' 19.49" 95° 44' 10.63"	0+60.89
L73	0+60.89					25.000	494712.2897	180097.4830	95° 44' 10.63"	0+85.89

NO	DATE	BY	CKD	APPR	REVISION

I hereby certify that this plan, specification or report was prepared by me or under my direct supervision and that I am a duly Licensed Professional Engineer under the laws of the State of Minnesota.

Signature: MICHAEL J. PAYNE

Date: 3–13–18 License#: 50484

City of Plymouth

PLYMOUTH, MINNESOTA
KILMER PARK STREET RECONSTRUCTION

INTERSECTION DETAILS
28TH AVE & LANCASTER LANE

STATE AID PROJECT NO.	DRAWN BY	DATE
– – – –	M. PAYNE	2–18
COUNTY PROJECT NO.	DESIGNED BY M. PAYNE	2–18
– – – –	CHECKED BY M. PAYNE	2–18
CITY PROJECT NO. ST189001.001	REVIEWED BY J. RENNEBERG	2–18

LEGEND

- DIRECTION OF CURB FLOW LINE
- PROPOSED STORM SEWER
- PROPOSED CATCH BASIN
- EXISTING CATCH BASIN
- EXISTING STORM SEWER MANHOLE
- EXISTING STORM SEWER

GENERAL NOTES:

1. ALL CURB ALIGNMENTS AND PROFILE ALIGNMENTS ARE AT LIP OF CURB.
2. PROPOSED STORM SEWER INFORMATION SHOWN ON SHEETS 42–54.
3. ADDITIONAL EXISTING STORM SEWER INFORMATION SHOWN ON REMOVALS SHEETS 19–22 AND EXISTING STRUCTURE SCHEDULE SHEET 41.

N

0 10 20 Feet

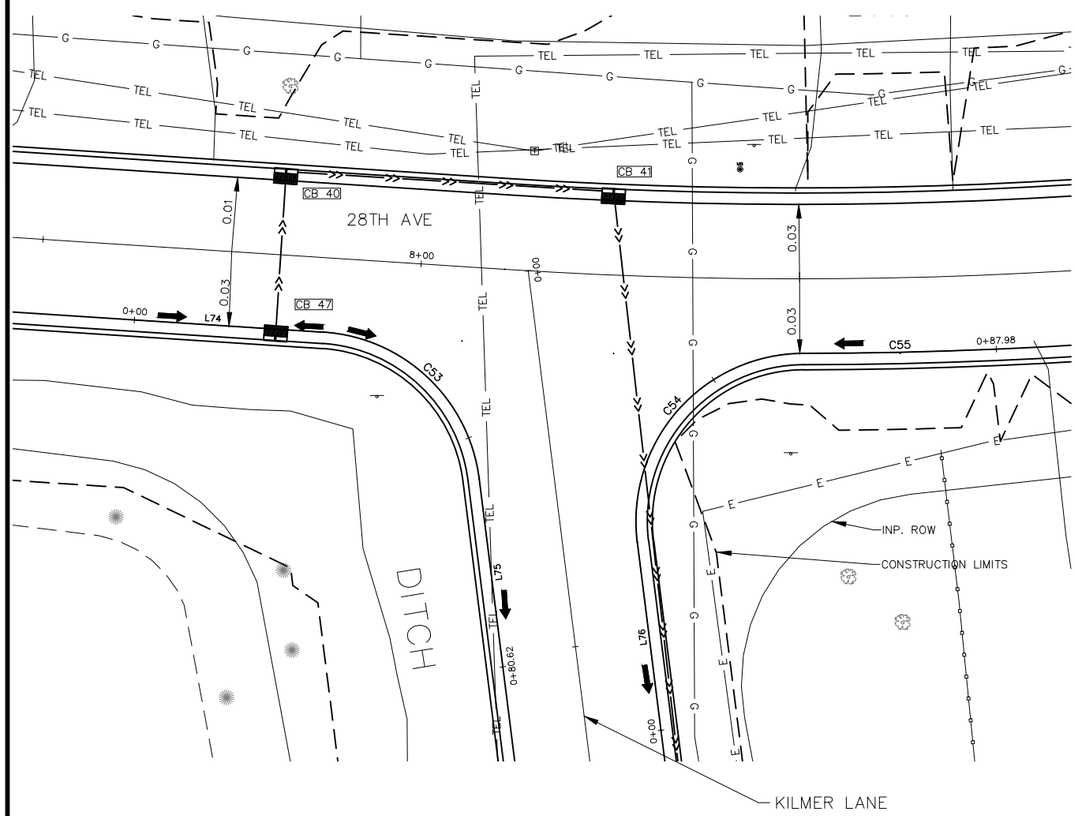

28TH AVE & KILMER LN – SW

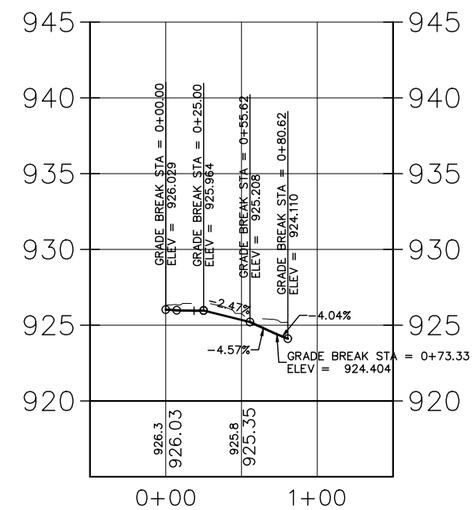

28TH AVE & KILMER LN – SE

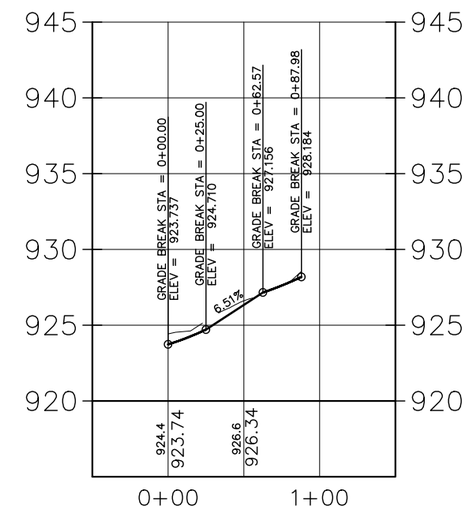

CURB RETURN – 28TH AVE & KILMER LN – SW

SEGMENT NUMBER	BEGIN STATION	DELTA	DEGREE	RADIUS	TANGENT	LENGTH	X	Y	AZIMUTH	END STATION
L74	0+00.00					25.000	494983.7168	180075.1528	93° 42' 39.13"	0+25.00
C53	0+25.00	79°07'32.98"	258°26'18.02"	22.17	18.316	30.617	495008.6644	180073.5348	93° 42' 39.13" 172° 50' 12.11"	0+55.62
L75	0+55.62					25.000	495029.2265	180054.1758	172° 50' 12.11"	0+80.62

CURB RETURN – 28TH AVE & KILMER LN – SE

SEGMENT NUMBER	BEGIN STATION	DELTA	DEGREE	RADIUS	TANGENT	LENGTH	X	Y	AZIMUTH	END STATION
L76	0+00.00					25.000	495053.2099	180021.0059	352° 50' 12.11"	0+25.00
C54	0+25.00	97°06'13.93"	258°26'18.02"	22.17	25.104	37.573	495050.0925	180045.8108	352° 50' 12.11" 89° 56' 26.04"	0+62.57
C55	0+62.57	2°23'14.37"	9°23'43.33"	609.83	12.707	25.410	495072.0664	180070.7453	89° 56' 26.04" 87° 33' 11.67"	0+87.98

NO	DATE	BY	CKD	APPR	REVISION

I hereby certify that this plan, specification or report was prepared by me or under my direct supervision and that I am a duly Licensed Professional Engineer under the laws of the State of Minnesota.

Signature: MICHAEL J. PAYNE

Date: 3–13–18 License#: 50484

City of Plymouth

PLYMOUTH, MINNESOTA
KILMER PARK STREET RECONSTRUCTION

INTERSECTION DETAILS
28TH AVE & KILMER LANE

STATE AID PROJECT NO. ----	DRAWN BY M. PAYNE	DATE 2–18
COUNTY PROJECT NO. ----	DESIGNED BY M. PAYNE	2–18
CITY PROJECT NO. ST189001.001	CHECKED BY M. PAYNE	2–18
	REVIEWED BY J. RENNEBERG	2–18

LEGEND

- DIRECTION OF CURB FLOW LINE
- PROPOSED STORM SEWER
- PROPOSED CATCH BASIN
- EXISTING CATCH BASIN
- EXISTING STORM SEWER MANHOLE
- EXISTING STORM SEWER

GENERAL NOTES:

1. ALL CURB ALIGNMENTS AND PROFILE ALIGNMENTS ARE AT LIP OF CURB.
2. PROPOSED STORM SEWER INFORMATION SHOWN ON SHEETS 42–54.
3. ADDITIONAL EXISTING STORM SEWER INFORMATION SHOWN ON REMOVALS SHEETS 19–22 AND EXISTING STRUCTURE SCHEDULE SHEET 41.

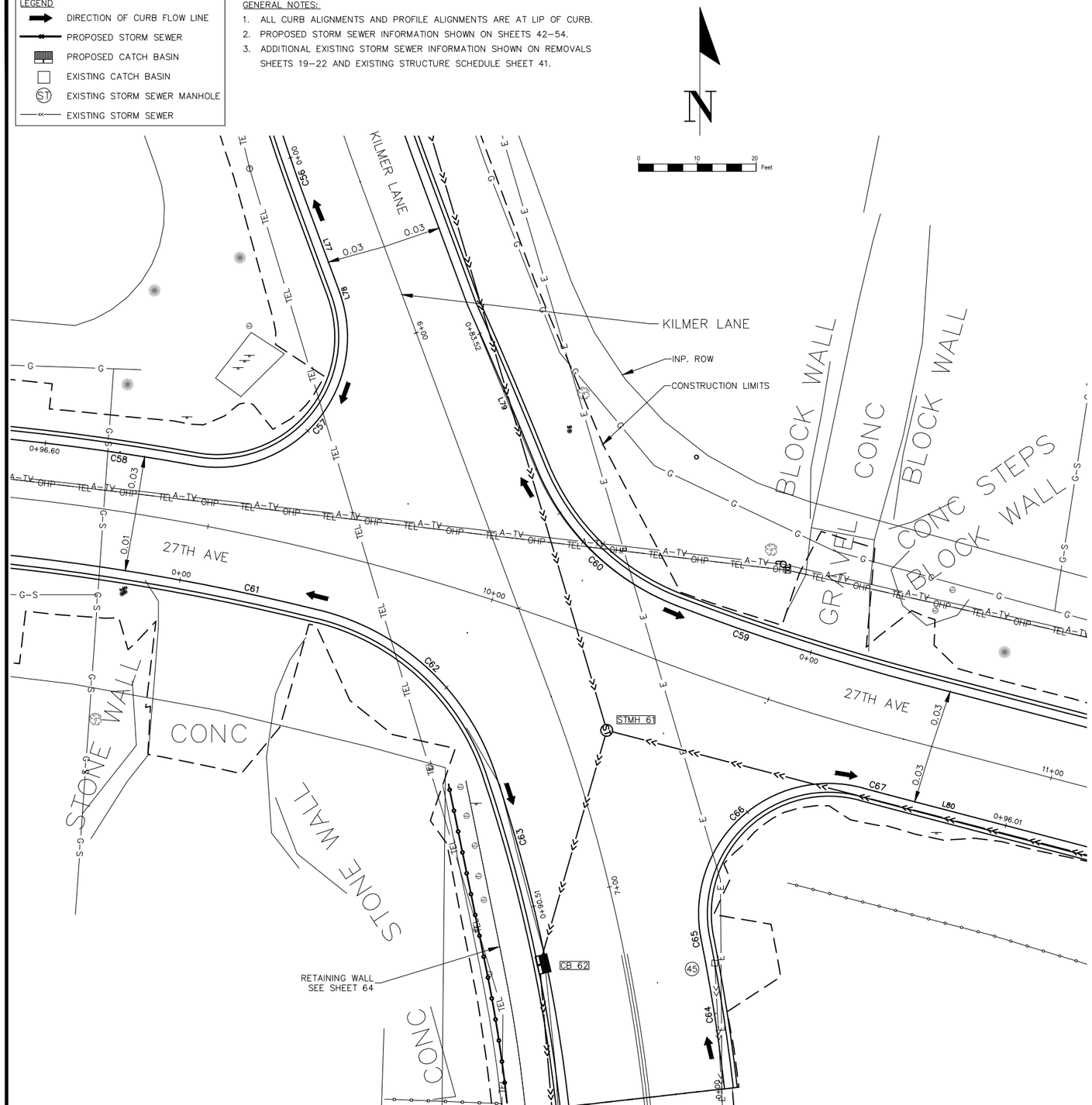

CURB RETURN – KILMER LN & 27TH AVE – NW										
SEGMENT NUMBER	BEGIN STATION	DELTA	DEGREE	RADIUS	TANGENT	LENGTH	X	Y	AZIMUTH	END STATION
C56	0+00.00	1°28'17.28"	18°29'33.54"	309.83	3.979	7.957	495037.2730	179519.4287	161° 06' 50.88" 159° 38' 33.60"	0+07.96
L77	0+07.96					16.368	495039.9449	179511.9339	159° 38' 33.60"	0+24.33
L78	0+24.33					0.928	495045.6390	179496.5881	162° 04' 09.85"	0+25.25
C57	0+25.25	118°11'35.57"	258°26'18.02"	22.17	37.038	45.734	495045.9247	179495.7051	162° 04' 09.85" 280° 15' 45.42"	0+70.99
C58	0+70.99	3°34'51.55"	13°58'49.36"	409.83	12.811	25.614	495020.8817	179467.0644	280° 15' 45.42" 276° 40' 53.87"	0+96.60

CURB RETURN – KILMER LN & 27TH AVE – NE										
SEGMENT NUMBER	BEGIN STATION	DELTA	DEGREE	RADIUS	TANGENT	LENGTH	X	Y	AZIMUTH	END STATION
C59	0+00.00	3°34'51.55"	14°41'05.37"	390.17	12.197	24.386	495125.9109	179435.1812	287° 27' 02.64" 291° 01' 54.19"	0+24.39
C60	0+24.39	46°21'28.35"	135°52'06.88"	42.17	18.056	34.120	495102.8912	179443.2161	291° 01' 54.19" 337° 23' 22.54"	0+58.51
L79	0+58.51					25.019	495079.0965	179466.3640	337° 23' 22.54"	0+83.52

CURB RETURN – KILMER LN & 27TH AVE – SW										
SEGMENT NUMBER	BEGIN STATION	DELTA	DEGREE	RADIUS	TANGENT	LENGTH	X	Y	AZIMUTH	END STATION
C61	0+00.00	3°34'51.55"	14°41'05.37"	390.17	12.197	24.386	495018.4853	179447.5170	100° 25' 39.90" 104° 00' 31.45"	0+24.39
C62	0+24.39	57°26'19.21"	135°52'06.88"	42.17	23.106	42.275	495042.3147	179442.3570	104° 00' 31.45" 161° 26' 50.66"	0+66.66
C63	0+66.66	4°56'21.45"	20°42'32.65"	276.67	11.933	23.851	495072.0851	179414.8586	161° 26' 50.66" 166° 23' 12.11"	0+90.51

CURB RETURN – KILMER LN & 27TH AVE – SE										
SEGMENT NUMBER	BEGIN STATION	DELTA	DEGREE	RADIUS	TANGENT	LENGTH	X	Y	AZIMUTH	END STATION
C64	0+00.00	4°52'14.76"	18°53'20.13"	303.33	12.901	25.786	495111.2065	179360.8739	353° 33' 20.61" 348° 41' 05.85"	0+25.79
C65	0+25.79	0°06'00.35"	27°35'13.91"	207.69	0.181	0.363	495107.2273	179386.3435	349° 43' 36.89" 349° 37' 36.55"	0+26.15
C66	0+26.15	115°40'00.75"	258°26'18.02"	22.17	35.251	44.756	495107.1623	179386.7005	349° 37' 36.55" 105° 17' 37.30"	0+70.91
C67	0+70.91	0°38'20.96"	13°58'49.36"	409.83	2.286	4.572	495134.8177	179412.0773	105° 17' 37.30" 104° 39' 16.33"	0+75.48
L80	0+75.48					20.538	495139.2342	179410.8960	104° 39' 16.33"	0+96.01

NO	DATE	BY	CKD	APPR	REVISION

I hereby certify that this plan, specification or report was prepared by me or under my direct supervision and that I am a duly Licensed Professional Engineer under the laws of the State of Minnesota.

Signature: MICHAEL J. PAYNE

Date: 3–13–18 License#: 50484

City of Plymouth

PLYMOUTH, MINNESOTA
KILMER PARK STREET RECONSTRUCTION

INTERSECTION DETAILS
KILMER LANE & LANCASTER LANE

STATE AID PROJECT NO.	DRAWN BY	DATE
----	M. PAYNE	2–18
COUNTY PROJECT NO.	DESIGNED BY	
----	M. PAYNE	2–18
CITY PROJECT NO.	CHECKED BY	
ST189001.001	M. PAYNE	2–18
	REVIEWED BY	
	J. RENNEBERG	2–18

KILMER LN & 27TH AVE – NW

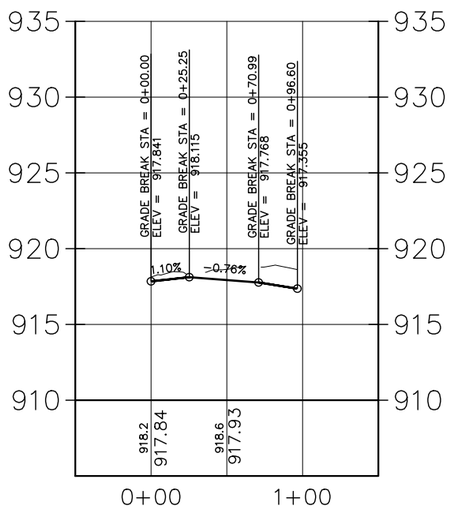

KILMER LN & 27TH AVE – NE

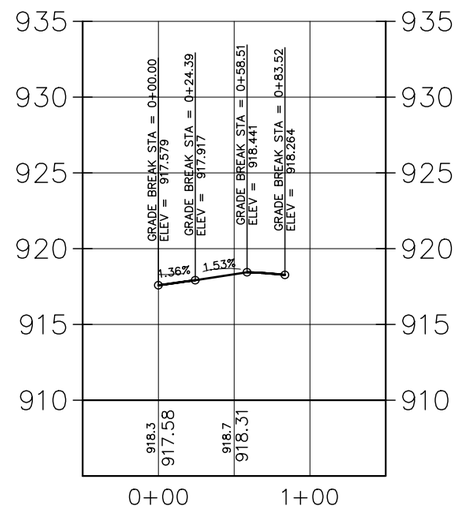

KILMER LN & 27TH AVE – SW

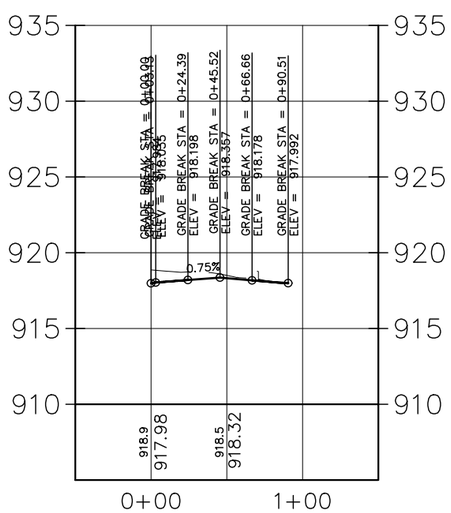

KILMER LN & 27TH AVE – SE

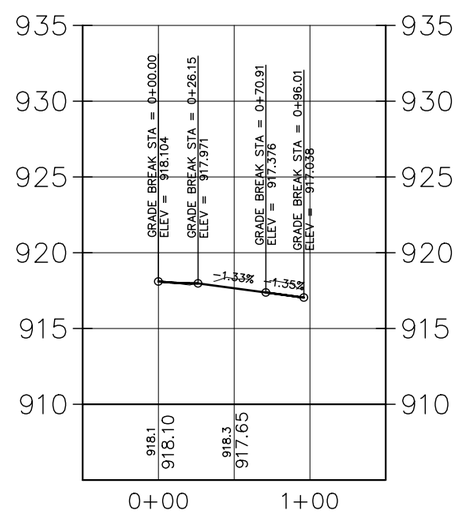

NO	DATE	BY	CKD	APPR	REVISION

I hereby certify that this plan, specification or report was prepared by me or under my direct supervision and that I am a duly Licensed Professional Engineer under the laws of the State of Minnesota.

Signature: MICHAEL J. PAYNE

Date: 3–13–18 License#: 50484

City of Plymouth

PLYMOUTH, MINNESOTA
KILMER PARK STREET RECONSTRUCTION

INTERSECTION PROFILES
KILMER LANE & LANCASTER LANE

STATE AID PROJECT NO.	DRAWN BY	DATE
----	M. PAYNE	2–18
COUNTY PROJECT NO.	DESIGNED BY M. PAYNE	2–18
----	CHECKED BY M. PAYNE	2–18
CITY PROJECT NO.	REVIEWED BY J. RENNEBERG	2–18
ST189001.001		

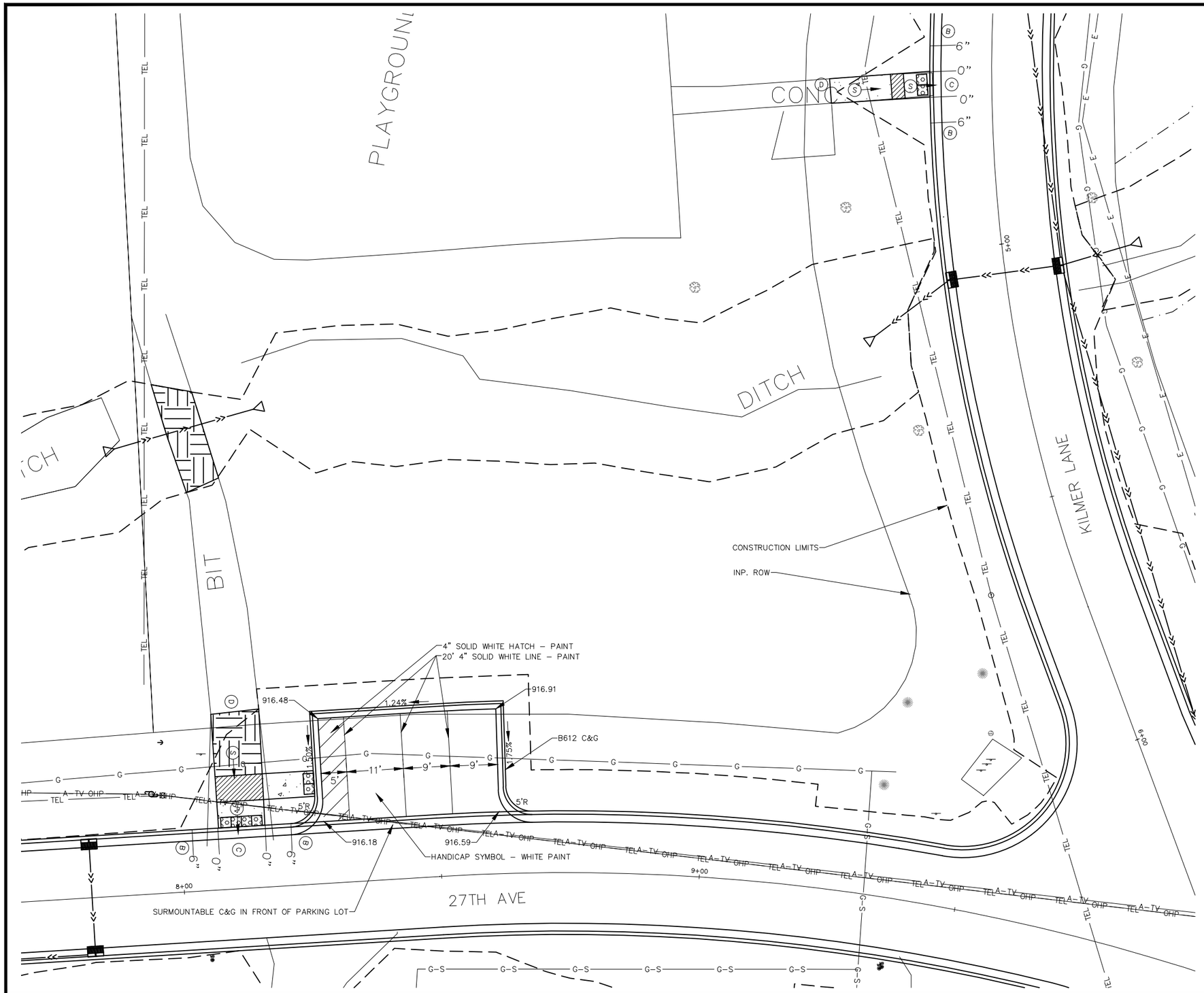

LEGEND

- 6" CONCRETE WALK
- 3" BITUMINOUS PAVEMENT
- TRUNCATED DOMES
- LANDING AREA – 4'X4' MIN. DEMENSIONS AND MAX 2% SLOPE IN ALL DIRECTIONS
- (S) INDICATES PEDESTRIAN RAMP – SLOPE SHALL BE BETWEEN 5.0% MINIMUM AND 8.3% MAXIMUM IN THE DIRECTION SHOWN AND CROSS SLOPE SHALL NOT EXCEED 2%
- (F) INDICATES PEDESTRIAN RAMP – SLOPE SHALL BE GREATER THAN 2% AND LESS THAN 5% IN THE DIRECTION SHOWN AND CROSS SLOPE SHALL NOT EXCEED 2.0%
- DIRECTION OF CURB FLOW LINE
- EXISTING STORM SEWER
- EXISTING CATCH BASIN
- PROPOSED CATCH BASIN

NOTES:

(A) BITUMINOUS TRAIL PAVEMENT

(B) TRANSITION FROM 2% GUTTER SLOPE TO STANDARD (.025%) GUTTER SLOPE.

(C) NON RADIAL TRUNCATED DOMES

(D) MATCH EXISTING

NO	DATE	BY	CKD	APPR	REVISION

I hereby certify that this plan, specification or report was prepared by me or under my direct supervision and that I am a duly Licensed Professional Engineer under the laws of the State of Minnesota.

Signature: MICHAEL J. PAYNE

Date: 3–13–18 License#: 50484

City of Plymouth

PLYMOUTH, MINNESOTA
KILMER PARK STREET RECONSTRUCTION

PEDESTRIAN RAMP DETAILS
27TH AVE & KILMER LANE

STATE AID PROJECT NO.	DRAWN BY	DATE
----	M. PAYNE	2–18
COUNTY PROJECT NO.	DESIGNED BY	
----	M. PAYNE	2–18
CITY PROJECT NO.	CHECKED BY	
ST189001.001	M. PAYNE	2–18
	REVIEWED BY	
	J. RENNEBERG	2–18

EXISTING STRUCTURE SCHEDULE

STRUCT. NO.	ALIGNMENT NAME	STATION	OFFSET (FT)	R/L	TYPE	ADJUST (EACH)	REMOVE (EACH)	SALVAGE CASTING	REPLACE VALVE	INSTALL MH SEALING SYSTEM	NOTES:
1	PILGRIM LANE	12+15.46	1.53	R	SANITARY MH	X				X	
2	PILGRIM LANE	8+12.03	1.67	R	SANITARY MH	X				X	
3	PILGRIM LANE	4+14.49	3.16	R	SANITARY MH	X				X	
4	PILGRIM LANE	0+14.14	1.03	L	SANITARY MH	X				X	
5	28TH AVE & NATHAN LANE	0+72.95	12.23	L	SANITARY MH	X				X	
6	28TH AVE & NATHAN LANE	3+26.52	0.75	R	SANITARY MH	X				X	
7	28TH AVE & NATHAN LANE	4+43.68	0.82	L	SANITARY MH	X				X	
8	28TH AVE & NATHAN LANE	5+81.01	22.05	L	SANITARY MH	X				X	
9	28TH AVE & NATHAN LANE	6+40.31	2.94	L	SANITARY MH	X				X	
10	28TH AVE & NATHAN LANE	8+64.20	2.37	L	SANITARY MH	X				X	
11	28TH AVE & NATHAN LANE	12+12.80	4.8	L	SANITARY MH	X				X	
12	28TH AVE & NATHAN LANE	14+56.92	6.52	L	SANITARY MH	X				X	
13	28TH AVE & NATHAN LANE	15+22.53	7.56	L	SANITARY MH	X				X	
14	28TH AVE & NATHAN LANE	18+72.34	4.94	L	SANITARY MH	X				X	
15	NATHAN LANE (SOUTH)				SANITARY MH						NO WORK NEEDED
16	NATHAN LANE (SOUTH)				SANITARY MH						NO WORK NEEDED
17	28TH AVE (EAST)	1+61.26	4.67	R	SANITARY MH	X				X	
18	28TH AVE (EAST)	4+59.44	5.36	L	SANITARY MH	X				X	
19	28TH AVE (EAST)	5+74.35	6.02	L	SANITARY MH	X				X	
20	28TH AVE (EAST)	8+02.31	5.21	L	SANITARY MH	X				X	
21	28TH AVE (EAST)	9+49.26	4.11	R	SANITARY MH	X				X	
22	28TH AVE (EAST)	10+77	0.47	R	SANITARY MH	X				X	
23	28TH AVE (EAST)	5+50.42	282.35	L	SANITARY MH						NO WORK NEEDED
24	LANCASTER LANE & 27TH AVE	3+57.42	1.44	L	SANITARY MH	X				X	
25	LANCASTER LANE & 27TH AVE	5+26.37	1.12	L	SANITARY MH	X				X	
26	LANCASTER LANE & 27TH AVE	6+32.82	13.55	R	SANITARY MH	X				X	ADJUST TO FIT CURB
27	LANCASTER LANE & 27TH AVE	6+91.41	11.42	R	SANITARY MH	X				X	ADJUST TO FIT CURB
28	KILMER LANE	9+59.52	349.67	R	SANITARY MH						NO WORK NEEDED
29	KILMER LANE	9+60.85	197.67	R	SANITARY MH						NO WORK NEEDED
30	KILMER LANE	11+88.65	200.06	R	SANITARY MH						NO WORK NEEDED
31	KILMER LANE	12+25.87	236.37	R	SANITARY MH						NO WORK NEEDED
32	LANCASTER LANE & 27TH AVE	11+36.85	4.61	L	SANITARY MH	X				X	
33	KILMER LANE	6+47.33	3.98	R	SANITARY MH	X				X	
34	LANCASTER LANE & 27TH AVE	8+70.17	2.27	L	SANITARY MH	X				X	
35	KILMER LANE	1+00.82	7.76	R	SANITARY MH	X				X	
36	KILMER LANE	2+28.94	1.49	R	SANITARY MH	X				X	
37	KILMER LANE	4+78.03	8.49	R	SANITARY MH	X				X	
38	PILGRIM LANE	0+18.95	26.87	L	CATCH BASIN	X					
39	PILGRIM LANE	0+22.94	18.37	R	CATCH BASIN		X	X			
40	PILGRIM LANE	0+16.76	26.83	R	CATCH BASIN	X		X			
41	PILGRIM LANE			R	CATCH BASIN						NO WORK NEEDED
42	28TH AVE (EAST)	5+73.73	139.49	L	CATCH BASIN						NO WORK NEEDED
43	28TH AVE & NATHAN LANE	5+80.1	12.81	R	CATCH BASIN		X	X			
44	KILMER LANE	7+08.41	13.37	R	CATCH BASIN		X	X			
45	KILMER LANE	7+16.02	14.83	L	CATCH BASIN	X		X			
46	KILMER LANE	9+63.93	23.22	L	CATCH BASIN						NO WORK NEEDED
47	KILMER LANE	11+98.24	23.77	L	STORM MH						NO WORK NEEDED
48	KILMER LANE	11+96.22	217.53	L	STORM MH						NO WORK NEEDED
49	KILMER LANE	12+28.48	44.43	R	CATCH BASIN						NO WORK NEEDED
50	KILMER LANE	8+38.27	156.47	L	CATCH BASIN						NO WORK NEEDED
51	KILMER LANE	9+64.46	22.73	R	CATCH BASIN		X	X			
52	KILMER LANE	11+51.29	205.42	R	CATCH BASIN						NO WORK NEEDED
53	KILMER LANE	10+49.83	197.92	R	CATCH BASIN						NO WORK NEEDED
54	KILMER LANE	19+06.08	14.49	L	CATCH BASIN	X					
55	KILMER LANE	16+20.8	14.72	L	CATCH BASIN		X	X			
56	KILMER LANE	16+20.89	14.17	R	CATCH BASIN		X	X			
57	KILMER LANE	19+03.35	14.79	R	CATCH BASIN		X	X			
58	KILMER LANE	19+08.69	23.49	L	STORM MH						NO WORK NEEDED
59	PILGRIM LANE	0+26.21	10.74	R	GATE VALVE				X		6"
60	PILGRIM LANE	4+27.42	23.24	R	HYDRANT		X				SALVAGE
61	PILGRIM LANE	8+86.48	23.62	R	HYDRANT		X				SALVAGE
62	PILGRIM LANE	12+86.08	14.07	R	GATE VALVE				X		6"
63	PILGRIM LANE (NORTH)	0+29.22	13.09	R	GATE VALVE				X		6"
64	28TH AVE & NATHAN LANE	3+85.67	21.42	L	HYDRANT		X				SALVAGE
65	28TH AVE & NATHAN LANE	5+75.24	30.23	L	GATE VALVE				X		12"
66	28TH AVE & NATHAN LANE	6+74.51	17.48	L	GATE VALVE				X		12"
67	28TH AVE & NATHAN LANE	10+42.57	24.66	L	HYDRANT & VALVE		X				SALVAGE
68	28TH AVE & NATHAN LANE	15+20.5	27.45	L	HYDRANT & VALVE		X				SALVAGE
69	28TH AVE & NATHAN LANE	18+52.41	13.22	L	GATE VALVE				X		12"
70	NATHAN LANE (SOUTH)	0+15.02	31.4	R	GATE VALVE	X					
71	NATHAN LANE (SOUTH)	0+29.01	7.31	L	GATE VALVE				X		6"
72	28TH AVE (EAST)	0+34.40	31.2	R	GATE VALVE				X		6"
73	28TH AVE (EAST)	2+31.33	21.05	R	HYDRANT		X				SALVAGE
74	28TH AVE (EAST)	6+30.37	22.08	R	HYDRANT		X				SALVAGE
75	28TH AVE (EAST)	10+82.78	21.8	R	HYDRANT & VALVE		X				SALVAGE
76	LANCASTER LANE & 27TH AVE	0+43.34	17.43	L	GATE VALVE				X		6"
77	LANCASTER LANE & 27TH AVE	3+63.08	23.58	L	HYDRANT		X				SALVAGE
78	LANCASTER LANE & 27TH AVE	7+88.87	15.98	L	GATE VALVE				X		6"
79	LANCASTER LANE & 27TH AVE	7+99.21	21.37	L	HYDRANT		X				SALVAGE
80	KILMER LANE	0+17.57	21.62	R	GATE VALVE				X		6"
81	KILMER LANE	3+48.64	25.8	R	HYDRANT		X				SALVAGE
EXISTING STRUCTURE WORK SUBTOTAL						34	8	8	11	30	

PROPOSED DRIVEWAY CULVERTS

ADDRESS	CULVERT LOCATION START STATION	CULVERT LOCATION OFFSET FT	CULVERT LOCATION R/L	CULVERT LOCATION END STATION	CULVERT LOCATION OFFSET FT	CULVERT LOCATION R/L	INVERTS START	INVERTS END	8" PVC SDR 26 L.F.	10" PVC SDR 26 L.F.	NOTES:
2645 PILGRIM	4+93.45	20.02	L	55+13.39	20.24	L	932.09	931.89	19.7		(A) (B)
9914 28TH AVE	4+04.04	25.38	L	4+26.69	24.85	L	939.64	938.88		25.7	(A)
9910 28TH AVE	5+69.28	31.31	L	5+79.27	42.24	L	934.74	934.05		20.4	(A)
9830 28TH AVE	1+18.62	23.97	L	1+35.40	24.38	L	933.66	933.49		16.8	(A)
9810 28TH AVE	2+20.85	26.86	L	2+37.62	26.90	L	932.7	932.57		16.8	(A)
CULVERT TOTALS									19.7	79.7	

NOTES:
(A) FIELD VERIFY LOCATION AND ELEVATION.
(B) MAINTAIN MINIMUM 1' COVER OVER CULVERT.

NO	DATE	BY	CKD	APPR	REVISION

I hereby certify that this plan, specification or report was prepared by me or under my direct supervision and that I am a duly Licensed Professional Engineer under the laws of the State of Minnesota.

Signature: MICHAEL J. PAYNE

Date: 3-13-18 License#: 50484

City of Plymouth

PLYMOUTH, MINNESOTA
KILMER PARK STREET RECONSTRUCTION

STORM SEWER
EXISTING STRUCTURE SCHEDULE & DRIVEWAY CULVERTS

STATE AID PROJECT NO. ----
COUNTY PROJECT NO. ----
CITY PROJECT NO. ST189001.001

		DATE
DRAWN BY	M. PAYNE	2-18
DESIGNED BY	M. PAYNE	2-18
CHECKED BY	M. PAYNE	2-18
REVIEWED BY	J. RENNEBERG	2-18

PROPOSED DRAINAGE SCHEDULE

STRUCT. NO.	STRUCTURE LOCATION				TO STRUCT. NO.	NEW STRUCTURE DESIGN							6" PVC SDR 26		8" PVC SDR 26		10" PVC SDR 26		12" CL. IV		15" CL. IV		18" CL. III		18" CL.I V		21" CL. III		24" CL. III		30" CL. III		36" SPAN CL. III		36" CL. III		44" SPAN CL. III		51" SPAN CL. III		NOTES:
	ALIGNMENT NAME	STATION	OFFSET FT	R/L		TYPE	DIA IN	DEPTH FT	CASTING TYPE	TOP OF CASTING	BOTTOM ELEV	STEPS REQ'D (A)	L.F.	APR	L.F.	APR	L.F.	APR	L.F.	APR	L.F.	APR	L.F.	APR	L.F.	APR	L.F.	APR	L.F.	APR	L.F.	APR	L.F.	APR	L.F.	APR	L.F.	APR	L.F.	APR		
CB 1	PILGRIM LANE	0+45.99	11.00	L	38	ST-6	48	9.90	R-3067-V	922.08	912.18	YES															31.0														(D) (F) (J)
CB 2	PILGRIM LANE	4+35	11.00	L	CB 1	ST-6	48	4.10	R-3067-V	931.81	927.71												389.0																		
CB 3	PILGRIM LANE	6+30	11.00	L	CB 2	ST-6	48	4.59	R-3067-V	935.42	930.83	YES											195.0																		
CB 4	PILGRIM LANE	8+80	11.00	L	CB 3	ST-6	48	4.35	R-3067-V	941.68	937.33								250.0																						
CB 5	PILGRIM LANE	8+80	11.00	R	CB 4	ST-6	48	4.02	R-3067-V	941.68	937.66								22.0																						
CB 6	PILGRIM LANE	8+78.6	17.87	R	CB 5	DRAIN BASIN	12	3.03	GRATE	941.25	938.22				7.0																										
40	PILGRIM LANE	0+16.76	26.83	R	CB 7																		33.7																		(D)
CB 7	PILGRIM LANE	0+46	11.00	R	CB 1	ST-6	48	5.56	R-3067-V	922.08	916.52	YES															22.0														
CB 8	PILGRIM LANE	4+35	11.00	R	CB 2	ST-2		3.70	R-3067-V	931.88	928.18										22.0																				
CB 9	PILGRIM LANE	4+34.93	19.46	L	CB 2	DRAIN BASIN	12	2.38	GRATE	931.00	928.62				8.5																										
CB 10	PILGRIM LANE	6+30	11.00	R	CB 3	ST-6	48	4.12	R-3067-V	935.42	931.30										22.0																				
CB 11	PILGRIM LANE	6+40.88	21.93	R	CB 10	MNDOT DES N	30	3.00	R-4342	935.00	932.00								15.4																						
CB 12	PILGRIM LANE	11+30	20.00	R		DRAIN BASIN	12	1.40	GRATE	952.00	950.60		8.0																												(G) - 1.25%
APR 13	NATHAN LANE (SOUTH)	2+30.92	32.51	L		ST-3					899.45											1.0																			(B) (F)
CB 14	NATHAN LANE (SOUTH)	2+12.64	14.62	L	APR 13	ST-6	48	10.18	R-3067-V	906.40	916.22	YES									25.6																				(E) (J)
CB 15	NATHAN LANE (SOUTH)	2+12.69	14.56	R	CB 14	ST-6	48	4.05	R-3067-V	906.40	902.35										29.2																				
CB 16	28TH AVE & NATHAN LANE	18+46	11.00	R	CB 15	ST-6	48	4.12	R-3067-V	927.93	923.61								252.5																						
CB 17	28TH AVE & NATHAN LANE	18+25	11.00	R	CB 16	ST-6	48	4.37	R-3067-V	930.21	925.84								21.0																						
CB 18	28TH AVE & NATHAN LANE	18+25	11.00	L	CB 17	ST-2		4.02	R-3067-V	930.41	926.39								22.0																						
CB 19	28TH AVE & NATHAN LANE	18+49	11.00	L	CB 6	ST-2		3.88	R-3067-V	928.13	924.25								22.0																						
CB 20	28TH AVE & NATHAN LANE	8+55	11.00	L	CB 21	ST-2		3.57	R-3067-V	947.14	943.62								22.0																						
CB 21	28TH AVE & NATHAN LANE	8+55	11.00	R	CB 22	ST-6	48	3.91	R-3067-V	947.31	943.40								162.0																						
CB 22	28TH AVE & NATHAN LANE	6+93	11.00	R	STMH 23	ST-6	48	3.96	R-3067-V	940.23	936.27								76.5																						
STMH 23	28TH AVE (EAST)	0+27.26	4.91	L	CB 29	ST-6	60	4.68	R-1642	937.16	932.48	YES											262.8																		
CB 24	28TH AVE & NATHAN LANE	8+55	22.00	L	CB 20	DRAIN BASIN	15	3.17	GRATE	947.00	943.83						11.0																								
CB 25	28TH AVE & NATHAN LANE	4+90	24.00	L	CB 26	DRAIN BASIN	15	2.42	GRATE	936.50	934.08						74.4																								
CB 26	28TH AVE & NATHAN LANE	5+59.25	11.00	L	CB 27	ST-6	48	3.27	R-3067-V	936.29	933.02								22.0																						
CB 27	28TH AVE & NATHAN LANE	5+59.25	11.00	R	STMH 23	ST-6	48	3.42	R-3067-V	936.29	932.87										77.6																				
CB 28	28TH AVE (EAST)	0+38.89	39.70	L	STMH 23	DRAIN BASIN	15	1.75	GRATE	934.75	933.00						36.7																								
CB 29	28TH AVE (EAST)	2+90	11.00	L	CB 31	ST-6	48	3.98	R-3067-V	932.52	928.54												100.0																		
CB 30	28TH AVE (EAST)	2+90	11.00	R	CB 29	ST-2		3.32	R-3067-V	932.52	929.20								22.0																						
CB 31	28TH AVE (EAST)	3+90	11.00	L	CB 32	ST-6	48	3.99	R-3067-V	930.26	926.29												71.2																		
CB 32	LANCASTER LANE & 27TH AVE	0+30.49	11.00	R	CB 48	ST-6	60	6.46	R-3067-V	928.57	922.11	YES																			334.7										
CB 33	LANCASTER LANE & 27TH AVE	0+30.49	11.24	L	CB 32	ST-6	48	5.82	R-3067-V	928.54	922.72																		22.2												
STMH 34	28TH AVE (EAST)	4+71	0.00		CB 33	ST-6	48	5.95	R-1642	928.52	922.87	YES																	29.9												
STMH 35	28TH AVE (EAST)	5+85	0.00		STMH 34	ST-6	48	3.91	R-1642	927.35	923.44																		114.0												
CB 36	28TH AVE (EAST)	5+85	11.00	L	STMH 35	ST-6	48	3.30	R-3067-V	927.18	923.88														11.0																
STMH 37	28TH AVE (EAST)	5+80.44	34.98	L	CB 36	ST-6	48	3.85	R-4342	928.10	924.25														24.4																
CB 38	28TH AVE (EAST)	2+87.74	22.78	L	3.1	MNDOT DES N	30	3.10	R-4342	932.25	929.15								12.0																						
CB 40	28TH AVE (EAST)	7+81.43	11.00	L	CB 41	ST-6	48	3.55	R-3067-V	926.05	922.50								43.3																						
CB 41	28TH AVE (EAST)	8+25	11.00	L	CB 42	ST-6	48	4.52	R-3067-V	926.37	921.85	YES							116.6																						
CB 42	KILMER LANE	1+07.67	11.00	L	CB 43	ST-6	48	4.87	R-3067-V	922.97	918.10	YES									144.2																				
CB 43	KILMER LANE	2+50	11.00	L	STMH 44	ST-6	48	6.83	R-3067-V	923.13	916.30	YES									195.1																				
STMH 44	KILMER LANE	4+44.55	4.91	L	CB 45	ST-6	48	4.17	R-1642	918.03	913.86										59.6																				
CB 45	KILMER LANE	5+05.6	11.00	L	MULTIPLE	ST-6	96	5.82	R-3067-V	917.38	911.56	YES																									188.8				(K)
CB 46	KILMER LANE	1+07.67	11.00	R	CB 42	ST-2		4.02	R-3067-V	922.97	918.95								22.0																						
CB 47	28TH AVE (EAST)	7+81.43	11.00	R	CB 40	ST-2		3.22	R-3067-V	925.88	922.66								22.0																						
CB 48	LANCASTER LANE & 27TH AVE	3+65	11.00	R	CB 49	ST-6	60	9.14	R-3067-V	928.70	918.93	YES																			137.2										
CB 49	LANCASTER LANE & 27TH AVE	5+00	11.00	R	CB 50	ST-6	72	4.89	R-3067-V	921.95	917.06	YES																			22.0										
CB 50	LANCASTER LANE & 27TH AVE	5+00	11.00	L	CB 51	ST-6	72	4.87	R-3067-V	921.65	916.78	YES																					133.1								
CB 51	LANCASTER LANE & 27TH AVE	6+42	11.00	L	CB 52	ST-6	60	4.26	R-3067-V	917.51	913.25																						81.3								
CB 52	LANCASTER LANE & 27TH AVE	7+35	11.00	L	CB 53	ST-6	96	4.29	R-3067-V	915.96	911.67																										22.0				

NO	DATE	BY	CKD	APPR	REVISION

I hereby certify that this plan, specification or report was prepared by me or under my direct supervision and that I am a duly Licensed Professional Engineer under the laws of the State of Minnesota.

Signature: MICHAEL J. PAYNE

Date: 3–13–18 License#: 50484

City of Plymouth

PLYMOUTH, MINNESOTA
KILMER PARK STREET RECONSTRUCTION

STORM SEWER
PROPOSED STRUCTURE SCHEDULE

STATE AID PROJECT NO.	DRAWN BY	DATE
----	M. PAYNE	2–18
COUNTY PROJECT NO.	DESIGNED BY	
----	M. PAYNE	2–18
CITY PROJECT NO.	CHECKED BY	
ST189001.001	M. PAYNE	2–18
	REVIEWED BY	
	J. RENNEBERG	2–18

PROPOSED DRAINAGE SCHEDULE

STRUCT. NO.	STRUCTURE LOCATION				TO STRUCT. NO.	NEW STRUCTURE DESIGN							6" PVC SDR 26		8" PVC SDR 26		10" PVC SDR 26		12" CL. IV		15" CL. IV		18" CL. III		18" CL.I V		21" CL. III		24" CL. III		30" CL. III		36" SPAN CL. III		36" CL. III		44" SPAN CL. III		51" SPAN CL. III		NOTES:
	ALIGNMENT NAME	STATION	OFFSET FT	R/L		TYPE	DIA IN	DEPTH FT	CASTING TYPE	TOP OF CASTING	BOTTOM ELEV	STEPS REQ'D (A)	L.F.	APR	L.F.	APR	L.F.	APR	L.F.	APR	L.F.	APR	L.F.	APR	L.F.	APR	L.F.	APR	L.F.	APR	L.F.	APR	L.F.	APR	L.F.	APR	L.F.	APR	L.F.	APR	
APR 52A	LANCASTER LANE & 27TH AVE	7+41.3	25.71	L	CB 52	ST-3					911.83																						13.0	1.0							(B) (E) (I)
CB 53	LANCASTER LANE & 27TH AVE	7+35	11.00	R	APR53A	ST-6	84	8.82	R-3067-V	916.16	907.34	YES																											13.0		(J)
APR 53A	LANCASTER LANE & 27TH AVE	7+35.68				ST-3					911.15																													1.0	(B) (E) (I)
CB 54	LANCASTER LANE & 27TH AVE	7+82.07	11.00	R	CB 53	ST-6	48	3.60	R-3067-V	915.96	912.36								47.1																						
CB 55	LANCASTER LANE & 27TH AVE	7+82.07	11.00	L	CB 54	ST-2		3.27	R-3067-V	915.76	912.49								22.0																						
CB 56	LANCASTER LANE & 27TH AVE	0+97.95	17.00	L		DRAIN BASIN	12	1.50	GRATE	929.15	926.67		4.0																												(G) - 2%
APR 56	PARK DITCH	1+01.69				ST-3					912.06																									1.0					(B) (E) (I)
APR 57	PARK DITCH	1+33.69			APR 56	ST-3					912.18																								32.0	1.0					(B) (E) (I)
APR 58	KILMER LANE	5+02.88	26.80	L	CB 45	ST-3					913.05																										16.0	1.0			(B) (E) (I)
CB 59	KILMER LANE	5+05.6	11.00	R	APR 60	ST-6	84	8.78	R-3067-V	917.38	908.60	YES																									22.0				(J)
APR 60	KILMER LANE	5+14.62	28.54	R		ST-3					912.50																											1.0			(B) (E) (I)
STMH 61	KILMER LANE	6+74.55	7.00	L	CB 62	ST-6	72	7.17	R-1642	918.37	911.20	YES																							41.5						
CB 62	KILMER LANE	7+10.62	14.50	R	STMH 63	ST-6	60	8.39	R-3067-V	921.26	909.73	YES																							141.4						
STMH 63	KILMER LANE	8+54.83	8.00	R	CB 64	ST-6	60	10.90	R-1642	919.96	910.28	YES																							110.6						
CB 64	KILMER LANE	9+64.46	22.73	R	STMH 65	ST-6	60	12.75	R-3067-V	921.26	909.73	YES																							233.4						
STMH 65	KILMER LANE	11+97.84	23.59	R	STMH 66	ST-6	96	16.63	R-1642	923.97	908.09	YES																							156.3						(C)
STMH 66	KILMER LANE	13+50			CB 67	ST-6	60	17.30	R-1642	923.86	907.31	YES																							271.6						
CB 67	KILMER LANE	16+20.8	14.72	L	54	ST-6	60	12.38	R-3067-V	917.58	905.46	YES																							289.1						(D)
CB 68	KILMER LANE	19+03.35	14.79	R	54	ST-2		3.66	R-3067-V	909.23	905.57								29.4																						(D)
CB 69	KILMER LANE	16+20.89	14.17	R	CB 67	ST-2		4.00	R-3067-V	917.52	913.52								28.9																						
CB 70	LANCASTER LANE & 27TH AVE	12+13.25	11.00	R	STMH 61	ST-6	48	2.88	R-3067-V	915.66	912.78								188.5																						
CB 71	LANCASTER LANE & 27TH AVE	12+13.25	11.00	L	CB 70	ST-2		2.77	R-3067-V	915.66	912.89								22.0																						
CB 72	28TH AVE (EAST)	5+75.47	22.39	R	STMH 35	DRAIN BASIN	12	1.75	GRATE	926.50	924.75				24.3																										
STORM SEWER SUBTOTAL													12.0		39.8		122.1		1,463.2		575.3	1	1,051.7		35.4		53.0		166.1		493.9		227.4	1	1,275.9	2	248.8	2	13.0	1	

NOTES:
(A) STEPS REQUIRED WHEN DEPTH FROM TOP OF CASTING TO STRUCTURE INVERT IS GREATER THAN 4.5 FT.
(B) PLACE RIPRAP AND GEOTEXTILE FILTER MATERIAL PER DETAIL ST-4.
(C) BUILD OVER EXISTING PIPE OR CONNECT TO EXISTING PIPE. PIPE TO PIPE CONNECTIONS SHALL BE MADE AT AN EXISTING PIPE JOINT. FIELD VERIFY LOCATION AND ELEVATION.
(D) CONNECT INTO EXISTING DRAINAGE STRUCTURE. FIELD VERIFY LOCATION AND ELEVATION.
(E) TIE LAST 6 JOINTS FOR STORM SEWER RUNS CONTAINING APRONS. TIED JOINTS SHALL BE INCIDENTAL.
(F) FIELD VERIFY LOCATION AND ELEVATION.
(G) CONNECT INTO STREET DRAIN TILE – MIN PIPE SLOPE.
(H) INCLUDES WEIR WALL (INCIDENTAL)
(I) INCLUDES GRATE (INCIDENTAL)
(J) 4' SUMP MANHOLE
(K) INCLUDES WEIR, SEE DETAIL SHEET 15

NO	DATE	BY	CKD	APPR	REVISION

I hereby certify that this plan, specification or report was prepared by me or under my direct supervision and that I am a duly Licensed Professional Engineer under the laws of the State of Minnesota.

Signature: MICHAEL J. PAYNE

Date: 3-13-18 License#: 50484

City of Plymouth

PLYMOUTH, MINNESOTA
KILMER PARK STREET RECONSTRUCTION

STORM SEWER
PROPOSED STRUCTURE SCHEDULE

STATE AID PROJECT NO. ----
COUNTY PROJECT NO. ----
CITY PROJECT NO. ST189001.001

		DATE
DRAWN BY	M. PAYNE	2-18
DESIGNED BY	M. PAYNE	2-18
CHECKED BY	M. PAYNE	2-18
REVIEWED BY	J. RENNEBERG	2-18

LEGEND

- LIMITS OF CONSTRUCTION
- EXISTING STORM SEWER / CULVERT
- PROPOSED STORM SEWER
- EXISTING SANITARY SEWER
- EXISTING WATER MAIN
- PROPOSED WATER MAIN
- PROPOSED SUBSURFACE DRAIN
- SURFACE FLOW DIRECTION
- EXISTING CATCH BASIN
- EXISTING STORM SEWER MANHOLE
- EXISTING APRON
- EXISTING STRUCTURE NUMBER
- PROPOSED CATCH BASIN
- PROPOSED STORM SEWER MANHOLE
- PROPOSED STORM SEWER APRON
- PROPOSED STRUCTURE NUMBER
- EXISTING SANITARY SEWER MANHOLE
- EXISTING HYDRANT
- PROPOSED HYDRANT
- EXISTING GATE VALVE
- PROPOSED GATE VALVE
- PROPOSED YARD DRAIN

GENERAL NOTES:

1. SEE EXISTING STRUCTURE SCHEDULE SHEET 41 FOR ADDITIONAL WORK TO EXISTING STRUCTURES.
2. PROPOSED STORM SEWER LATERAL PROFILES SHOWN ON SHEETS 52–54.

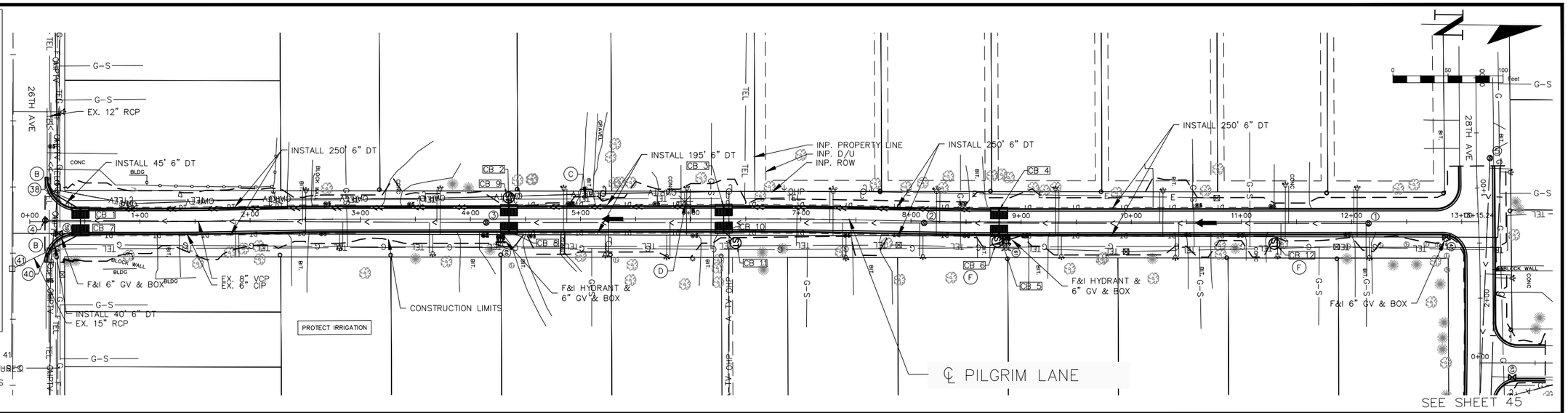

NOTES

- (A) CONNECT TO EXISTING STORM SEWER.
- (B) CONNECT TO EXISTING DRAINAGE STRUCTURE.
- (C) INSTALL CULVERT. SEE SHEET 41.
- (D) INSTALL YARD DRAIN BOX.
- (E) RIP RAP / SEE DETAIL SHEET 7.
- (F) INSTALL DRAIN BASIN. SEE DETAIL SHEET 15 & STRUCTURE SCHEDULE SHEETS 42–43.

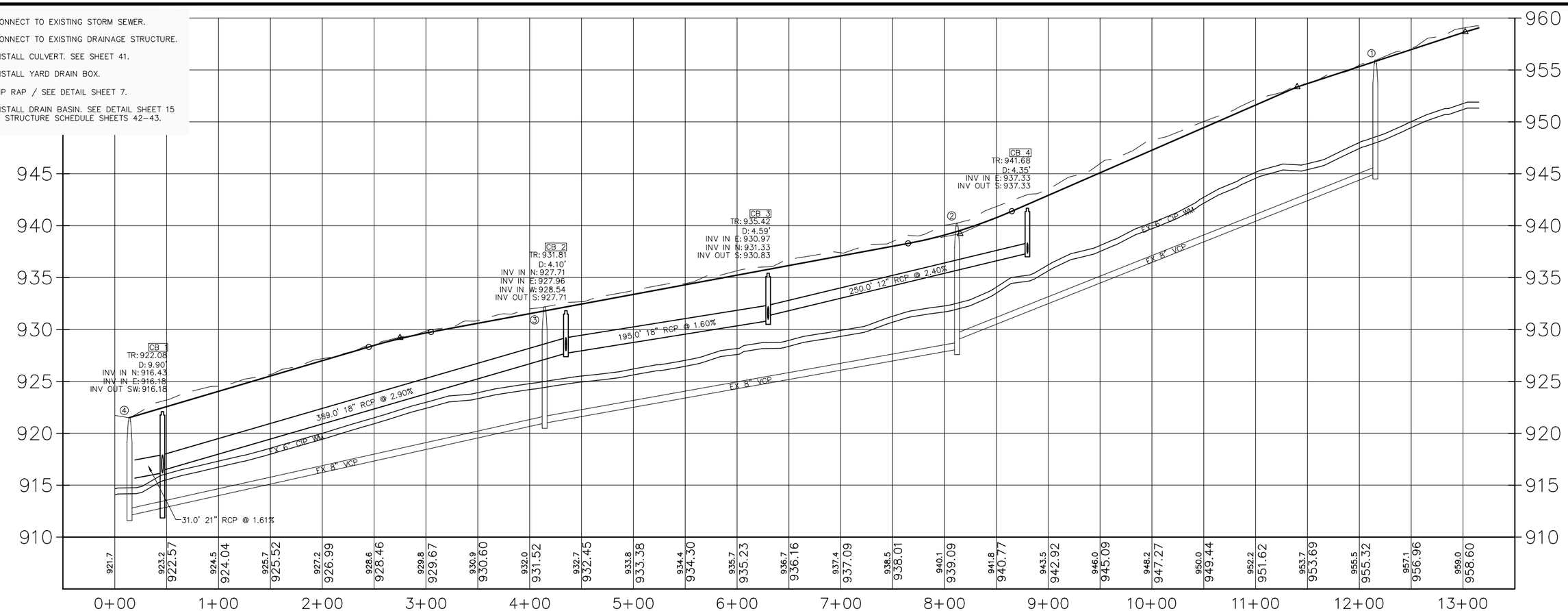

NO	DATE	BY	CKD	APPR	REVISION

I hereby certify that this plan, specification or report was prepared by me or under my direct supervision and that I am a duly Licensed Professional Engineer under the laws of the State of Minnesota.

Signature: MICHAEL J. PAYNE

Date: 3–13–18 License#: 50484

City of Plymouth

PLYMOUTH, MINNESOTA
KILMER PARK STREET RECONSTRUCTION

STORM SEWER PLAN & PROFILE

PILGRIM LANE

STATE AID PROJECT NO.	DRAWN BY	DATE
----	M. PAYNE	2–18
COUNTY PROJECT NO.	DESIGNED BY	
----	M. PAYNE	2–18
	CHECKED BY	
CITY PROJECT NO.	M. PAYNE	2–18
ST189001.001	REVIEWED BY	
	J. RENNEBERG	2–18

LEGEND

- LIMITS OF CONSTRUCTION
- EXISTING STORM SEWER / CULVERT
- PROPOSED STORM SEWER
- EXISTING SANITARY SEWER
- EXISTING WATER MAIN
- PROPOSED WATER MAIN
- PROPOSED SUBSURFACE DRAIN
- SURFACE FLOW DIRECTION
- EXISTING CATCH BASIN
- EXISTING STORM SEWER MANHOLE
- EXISTING APRON
- EXISTING STRUCTURE NUMBER
- PROPOSED CATCH BASIN
- PROPOSED STORM SEWER MANHOLE
- PROPOSED STORM SEWER APRON
- PROPOSED STRUCTURE NUMBER
- EXISTING SANITARY SEWER MANHOLE
- EXISTING HYDRANT
- PROPOSED HYDRANT
- EXISTING GATE VALVE
- PROPOSED GATE VALVE
- PROPOSED YARD DRAIN

GENERAL NOTES:

1. SEE EXISTING STRUCTURE SCHEDULE SHEET 41 FOR ADDITIONAL WORK TO EXISTING STRUCTURES.
2. PROPOSED STORM SEWER LATERAL PROFILES SHOWN ON SHEETS 52–54.

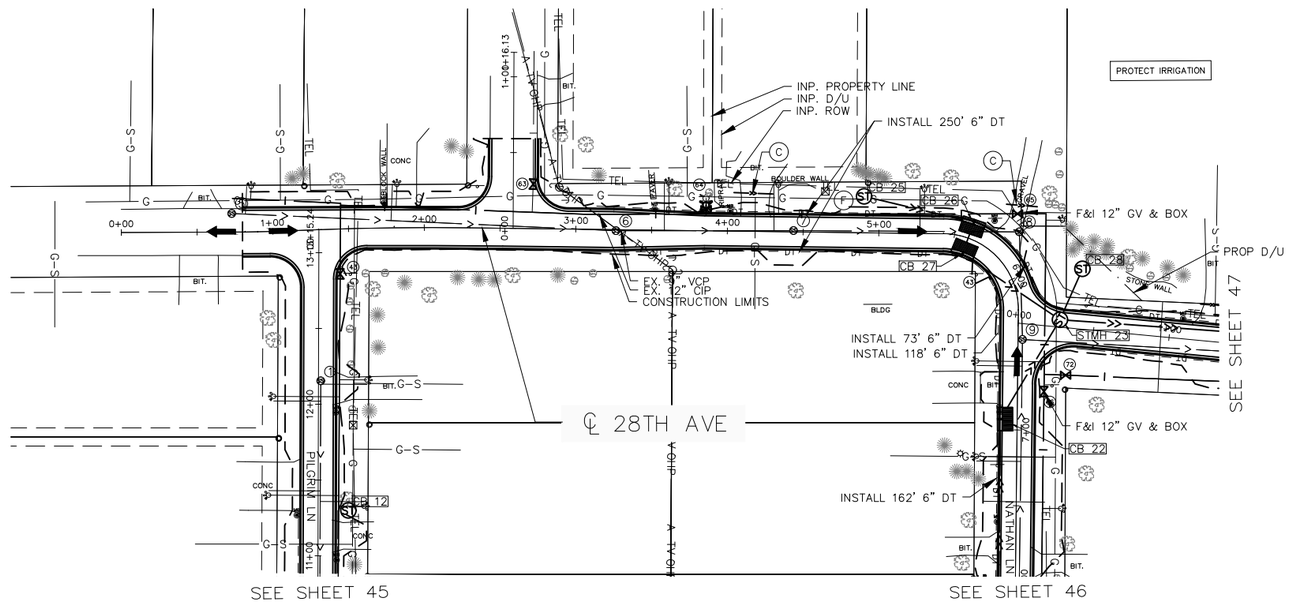

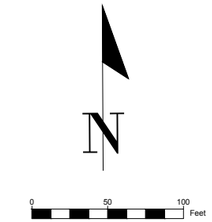

NOTES

- (A) CONNECT TO EXISTING STORM SEWER.
- (B) CONNECT TO EXISTING DRAINAGE STRUCTURE.
- (C) INSTALL CULVERT. SEE SHEET 41.
- (D) INSTALL YARD DRAIN BOX.
- (E) RIP RAP / SEE DETAIL SHEET 7.
- (F) INSTALL DRAIN BASIN. SEE DETAIL SHEET 15 & STRUCTURE SCHEDULE SHEETS 42–43.

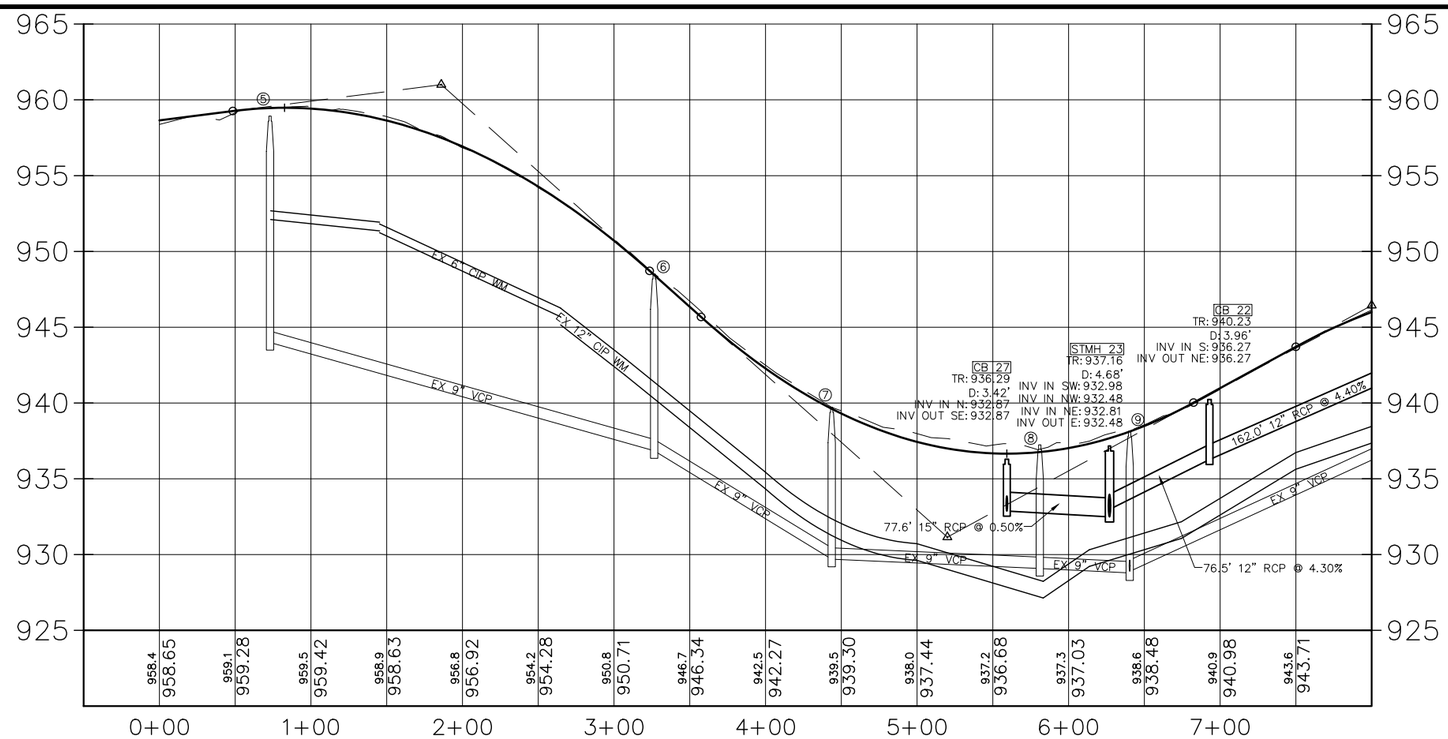

NO	DATE	BY	CKD	APPR	REVISION

I hereby certify that this plan, specification or report was prepared by me or under my direct supervision and that I am a duly Licensed Professional Engineer under the laws of the State of Minnesota.

Signature: MICHAEL J. PAYNE

Date: 3–13–18 License#: 50484

City of Plymouth

PLYMOUTH, MINNESOTA
KILMER PARK STREET RECONSTRUCTION

STORM SEWER PLAN & PROFILE

28TH AVE (WEST)

STATE AID PROJECT NO.	DRAWN BY	DATE
----	M. PAYNE	2–18
COUNTY PROJECT NO.	DESIGNED BY	
----	M. PAYNE	2–18
CITY PROJECT NO.	CHECKED BY	
ST189001.001	M. PAYNE	2–18
	REVIEWED BY	
	J. RENNEBERG	2–18

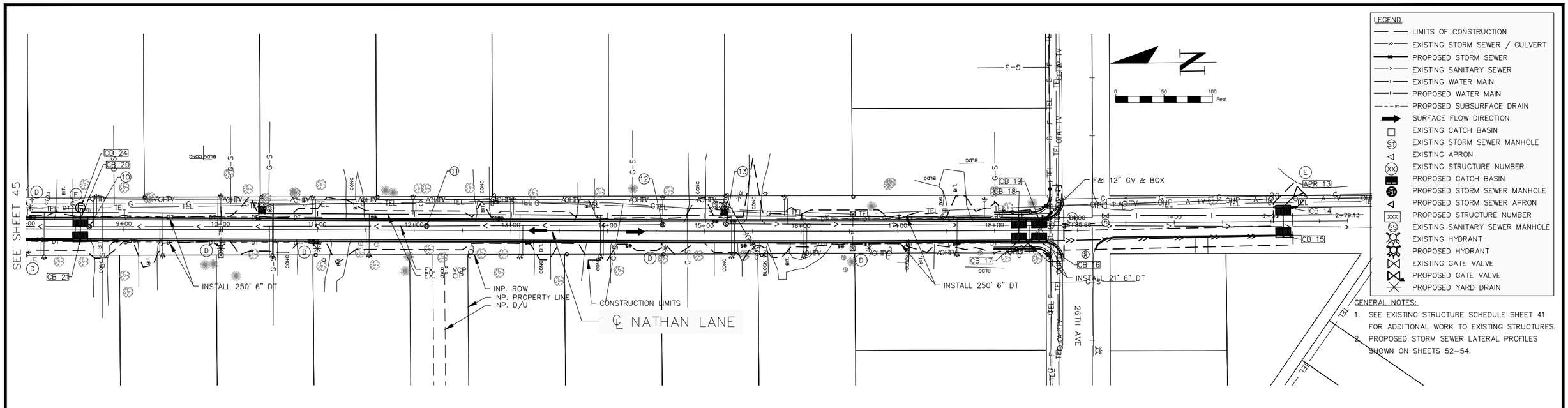

LEGEND

- LIMITS OF CONSTRUCTION
- EXISTING STORM SEWER / CULVERT
- PROPOSED STORM SEWER
- EXISTING SANITARY SEWER
- EXISTING WATER MAIN
- PROPOSED WATER MAIN
- PROPOSED SUBSURFACE DRAIN
- SURFACE FLOW DIRECTION
- EXISTING CATCH BASIN
- EXISTING STORM SEWER MANHOLE
- EXISTING APRON
- EXISTING STRUCTURE NUMBER
- PROPOSED CATCH BASIN
- PROPOSED STORM SEWER MANHOLE
- PROPOSED STORM SEWER APRON
- PROPOSED STRUCTURE NUMBER
- EXISTING SANITARY SEWER MANHOLE
- EXISTING HYDRANT
- PROPOSED HYDRANT
- EXISTING GATE VALVE
- PROPOSED GATE VALVE
- PROPOSED YARD DRAIN

GENERAL NOTES:

1. SEE EXISTING STRUCTURE SCHEDULE SHEET 41 FOR ADDITIONAL WORK TO EXISTING STRUCTURES.
2. PROPOSED STORM SEWER LATERAL PROFILES SHOWN ON SHEETS 52–54.

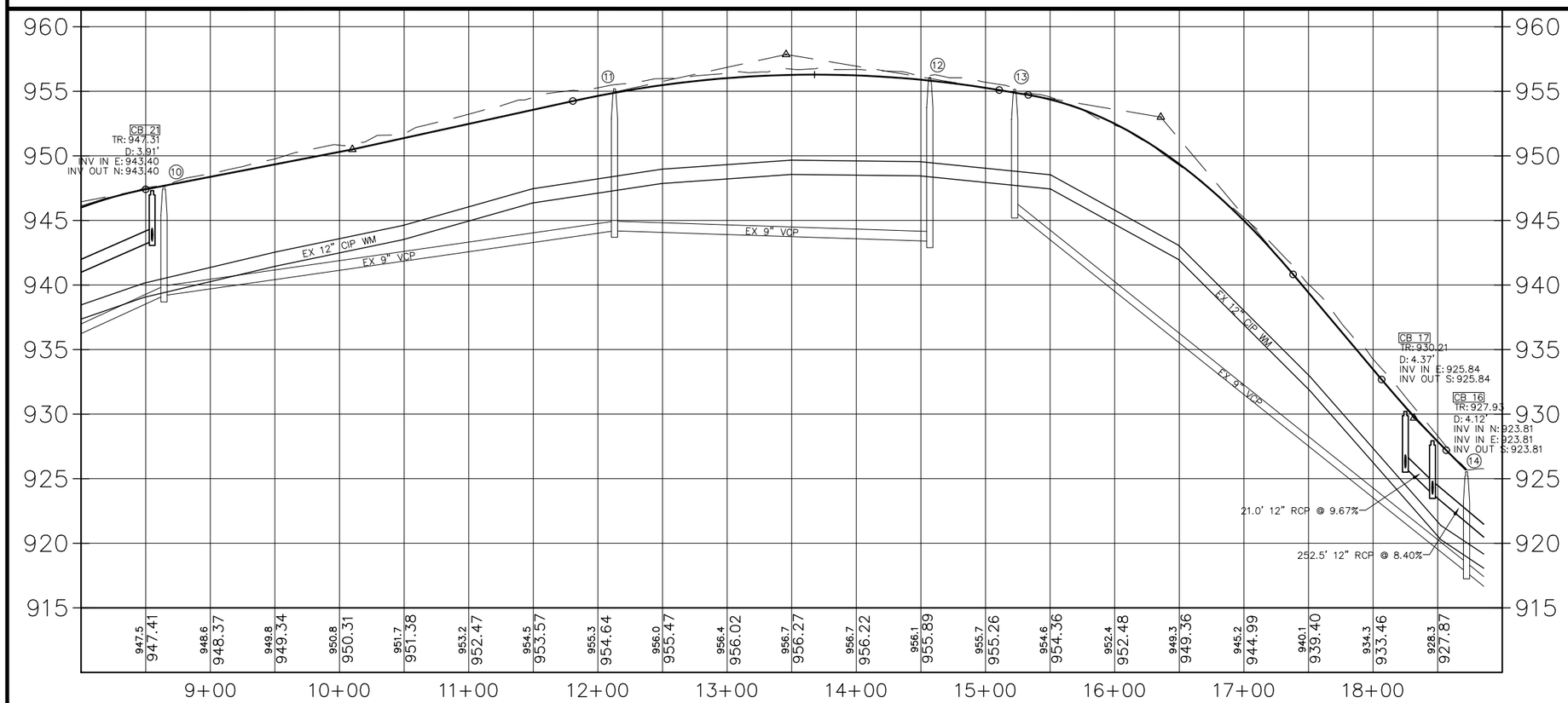

NOTES

- (A) CONNECT TO EXISTING STORM SEWER.
- (B) CONNECT TO EXISTING DRAINAGE STRUCTURE.
- (C) INSTALL CULVERT. SEE SHEET 41.
- (D) INSTALL YARD DRAIN BOX.
- (E) RIP RAP / SEE DETAIL SHEET 7.
- (F) INSTALL DRAIN BASIN. SEE DETAIL SHEET 15 & STRUCTURE SCHEDULE SHEETS 42–43.

NO	DATE	BY	CKD	APPR	REVISION

I hereby certify that this plan, specification or report was prepared by me or under my direct supervision and that I am a duly Licensed Professional Engineer under the laws of the State of Minnesota.

Signature: MICHAEL J. PAYNE

Date: 3–13–18 License#: 50484

City of Plymouth

PLYMOUTH, MINNESOTA
KILMER PARK STREET RECONSTRUCTION

STORM SEWER PLAN & PROFILE

NATHAN LANE

STATE AID PROJECT NO.	DRAWN BY M. PAYNE	DATE 2–18
----	DESIGNED BY M. PAYNE	2–18
COUNTY PROJECT NO. ----	CHECKED BY M. PAYNE	2–18
CITY PROJECT NO. ST189001.001	REVIEWED BY J. RENNEBERG	2–18

LEGEND

- LIMITS OF CONSTRUCTION
- EXISTING STORM SEWER / CULVERT
- PROPOSED STORM SEWER
- EXISTING SANITARY SEWER
- EXISTING WATER MAIN
- PROPOSED WATER MAIN
- PROPOSED SUBSURFACE DRAIN
- SURFACE FLOW DIRECTION
- EXISTING CATCH BASIN
- EXISTING STORM SEWER MANHOLE
- EXISTING APRON
- EXISTING STRUCTURE NUMBER
- PROPOSED CATCH BASIN
- PROPOSED STORM SEWER MANHOLE
- PROPOSED STORM SEWER APRON
- PROPOSED STRUCTURE NUMBER
- EXISTING SANITARY SEWER MANHOLE
- EXISTING HYDRANT
- PROPOSED HYDRANT
- EXISTING GATE VALVE
- PROPOSED GATE VALVE
- PROPOSED YARD DRAIN

NOTES

(A) CONNECT TO EXISTING STORM SEWER.
(B) CONNECT TO EXISTING DRAINAGE STRUCTURE.
(C) INSTALL CULVERT. SEE SHEET 41.
(D) INSTALL YARD DRAIN BOX.
(E) RIP RAP / SEE DETAIL SHEET 7.
(F) INSTALL DRAIN BASIN. SEE DETAIL SHEET 15 & STRUCTURE SCHEDULE SHEETS 42–43.

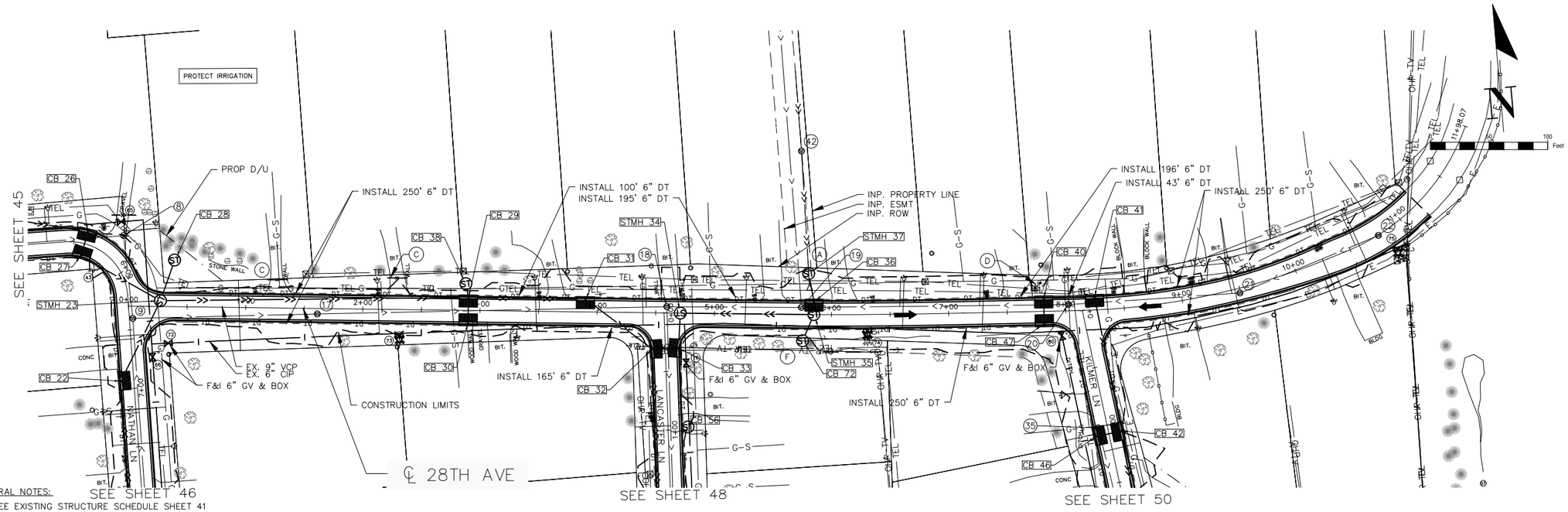

GENERAL NOTES:

1. SEE EXISTING STRUCTURE SCHEDULE SHEET 41 FOR ADDITIONAL WORK TO EXISTING STRUCTURES.
2. PROPOSED STORM SEWER LATERAL PROFILES SHOWN ON SHEETS 52–54.

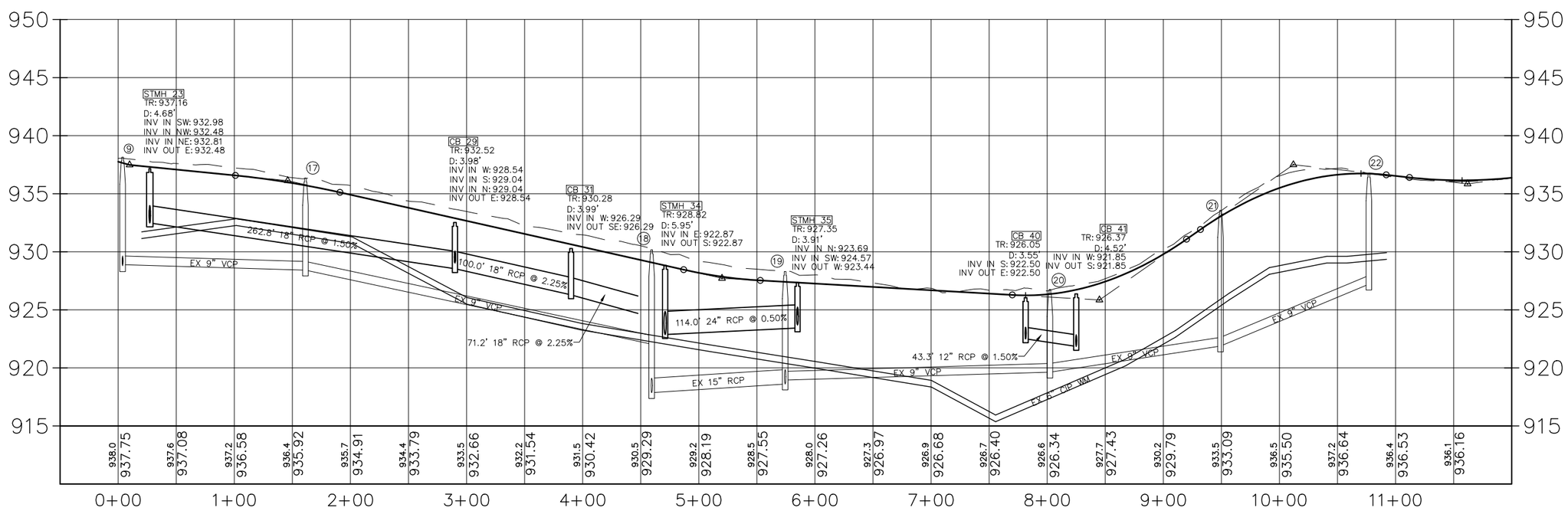

NO	DATE	BY	CKD	APPR	REVISION

I hereby certify that this plan, specification or report was prepared by me or under my direct supervision and that I am a duly Licensed Professional Engineer under the laws of the State of Minnesota.

Signature: MICHAEL J. PAYNE

Date: 3–13–18 License#: 50484

City of Plymouth

PLYMOUTH, MINNESOTA
KILMER PARK STREET RECONSTRUCTION

STORM SEWER PLAN & PROFILE

28TH AVE (EAST)

STATE AID PROJECT NO.	DRAWN BY	DATE
----	M. PAYNE	2–18
COUNTY PROJECT NO.	DESIGNED BY M. PAYNE	2–18
----	CHECKED BY M. PAYNE	2–18
CITY PROJECT NO. ST189001.001	REVIEWED BY J. RENNEBERG	2–18

LEGEND

- LIMITS OF CONSTRUCTION
- EXISTING STORM SEWER / CULVERT
- PROPOSED STORM SEWER
- EXISTING SANITARY SEWER
- EXISTING WATER MAIN
- PROPOSED WATER MAIN
- PROPOSED SUBSURFACE DRAIN
- SURFACE FLOW DIRECTION
- EXISTING CATCH BASIN
- EXISTING STORM SEWER MANHOLE
- EXISTING APRON
- EXISTING STRUCTURE NUMBER
- PROPOSED CATCH BASIN
- PROPOSED STORM SEWER MANHOLE
- PROPOSED STORM SEWER APRON
- PROPOSED STRUCTURE NUMBER
- EXISTING SANITARY SEWER MANHOLE
- EXISTING HYDRANT
- PROPOSED HYDRANT
- EXISTING GATE VALVE
- PROPOSED GATE VALVE
- PROPOSED YARD DRAIN

GENERAL NOTES:

1. SEE EXISTING STRUCTURE SCHEDULE SHEET 41 FOR ADDITIONAL WORK TO EXISTING STRUCTURES.
2. PROPOSED STORM SEWER LATERAL PROFILES SHOWN ON SHEETS 52–54.

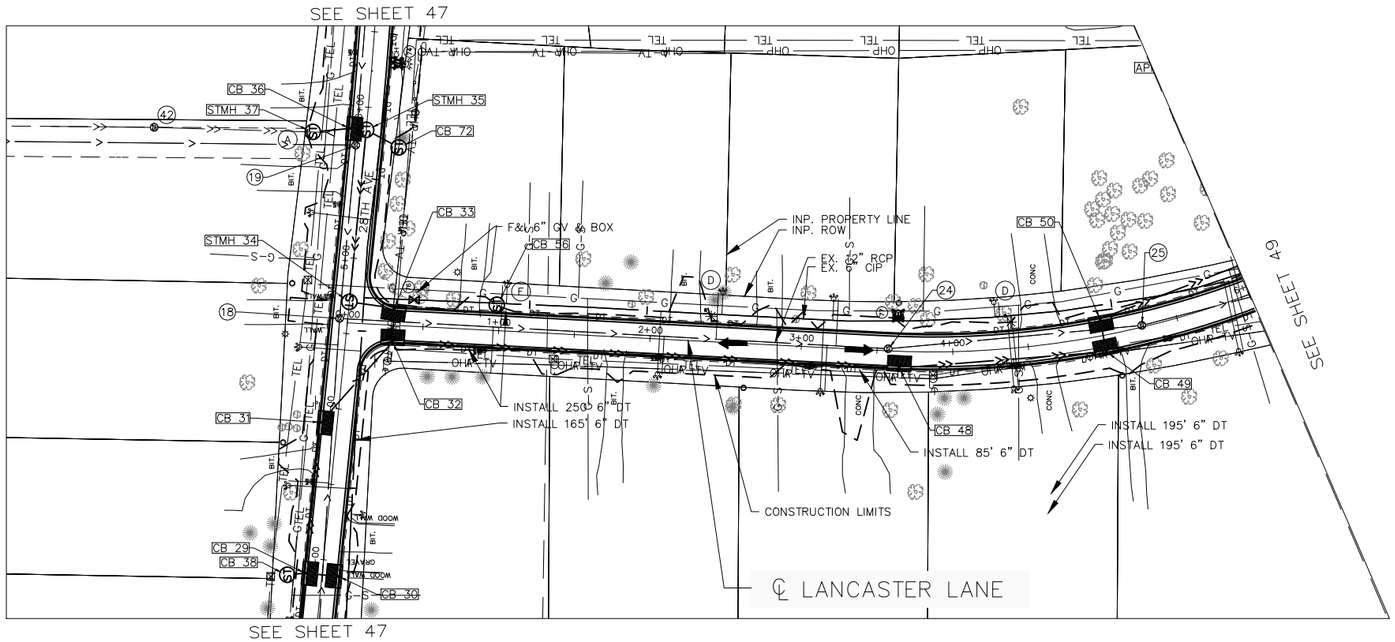

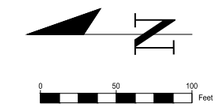

NOTES

- (A) CONNECT TO EXISTING STORM SEWER.
- (B) CONNECT TO EXISTING DRAINAGE STRUCTURE.
- (C) INSTALL CULVERT. SEE SHEET 41.
- (D) INSTALL YARD DRAIN BOX.
- (E) RIP RAP / SEE DETAIL SHEET 7.
- (F) INSTALL DRAIN BASIN. SEE DETAIL SHEET 15 & STRUCTURE SCHEDULE SHEETS 42–43.

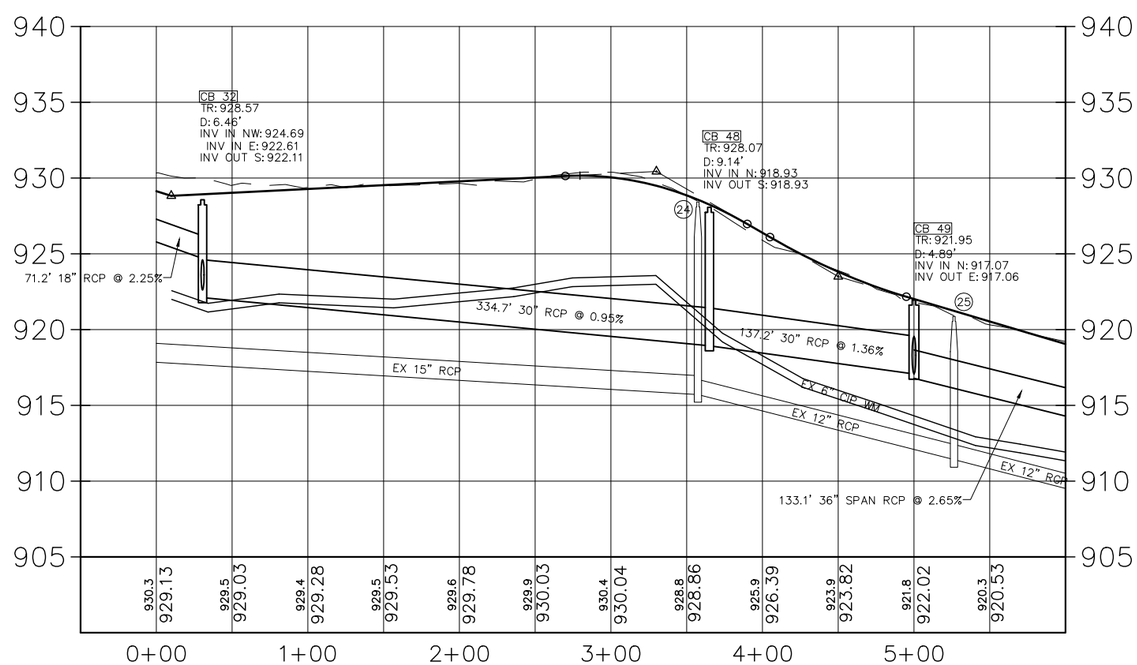

NO	DATE	BY	CKD	APPR	REVISION

I hereby certify that this plan, specification or report was prepared by me or under my direct supervision and that I am a duly Licensed Professional Engineer under the laws of the State of Minnesota.

Signature: MICHAEL J. PAYNE

Date: 3–13–18 License#: 50484

City of Plymouth

PLYMOUTH, MINNESOTA
KILMER PARK STREET RECONSTRUCTION

STORM SEWER PLAN & PROFILE

LANCASTER LANE – 0+00 – 6+00

STATE AID PROJECT NO.	DRAWN BY	DATE
----	M. PAYNE	2–18
COUNTY PROJECT NO.	DESIGNED BY	
----	M. PAYNE	2–18
CITY PROJECT NO.	CHECKED BY	
ST189001.001	M. PAYNE	2–18
	REVIEWED BY	
	J. RENNEBERG	2–18

LEGEND

- LIMITS OF CONSTRUCTION
- EXISTING STORM SEWER / CULVERT
- PROPOSED STORM SEWER
- EXISTING SANITARY SEWER
- EXISTING WATER MAIN
- PROPOSED WATER MAIN
- PROPOSED SUBSURFACE DRAIN
- SURFACE FLOW DIRECTION
- EXISTING CATCH BASIN
- EXISTING STORM SEWER MANHOLE
- EXISTING APRON
- EXISTING STRUCTURE NUMBER
- PROPOSED CATCH BASIN
- PROPOSED STORM SEWER MANHOLE
- PROPOSED STORM SEWER APRON
- PROPOSED STRUCTURE NUMBER
- EXISTING SANITARY SEWER MANHOLE
- EXISTING HYDRANT
- PROPOSED HYDRANT
- EXISTING GATE VALVE
- PROPOSED GATE VALVE
- PROPOSED YARD DRAIN

GENERAL NOTES:

1. SEE EXISTING STRUCTURE SCHEDULE SHEET 41 FOR ADDITIONAL WORK TO EXISTING STRUCTURES.
2. PROPOSED STORM SEWER LATERAL PROFILES SHOWN ON SHEETS 52–54.
3. SEE SHEETS 55–57 FOR DITCH GRADING PLANS & PROFILES.

NOTES

(A) CONNECT TO EXISTING STORM SEWER.
(B) CONNECT TO EXISTING DRAINAGE STRUCTURE.
(C) INSTALL CULVERT. SEE SHEET 41.
(D) INSTALL YARD DRAIN BOX.
(E) RIP RAP / SEE DETAIL SHEET 7.
(F) INSTALL DRAIN BASIN. SEE DETAIL SHEET 15 & STRUCTURE SCHEDULE SHEETS 42–43.

HYDRODYNAMIC SEPARATOR:

CB 51 SHALL BE SITE OF PROPOSED HYDRODYNAMIC SEPARATOR SITE 1. SEE PROJECT SPECIFICATIONS FOR INFORMATION.

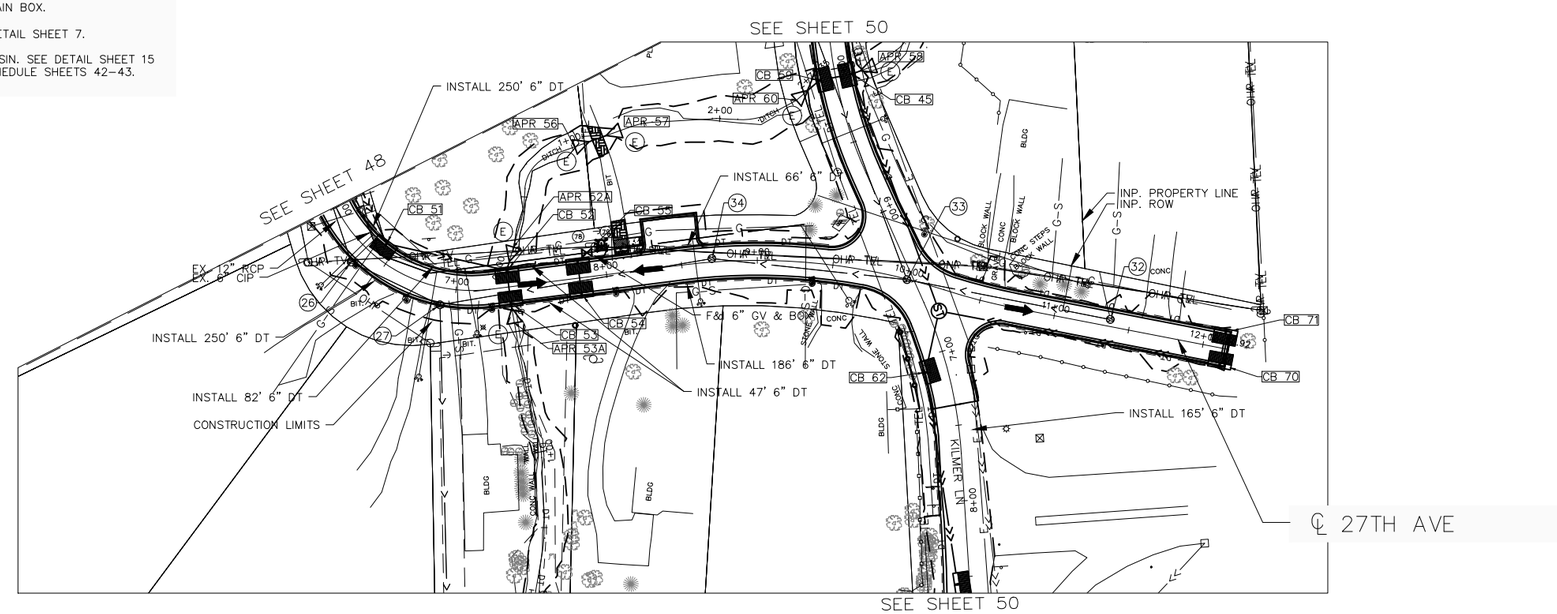

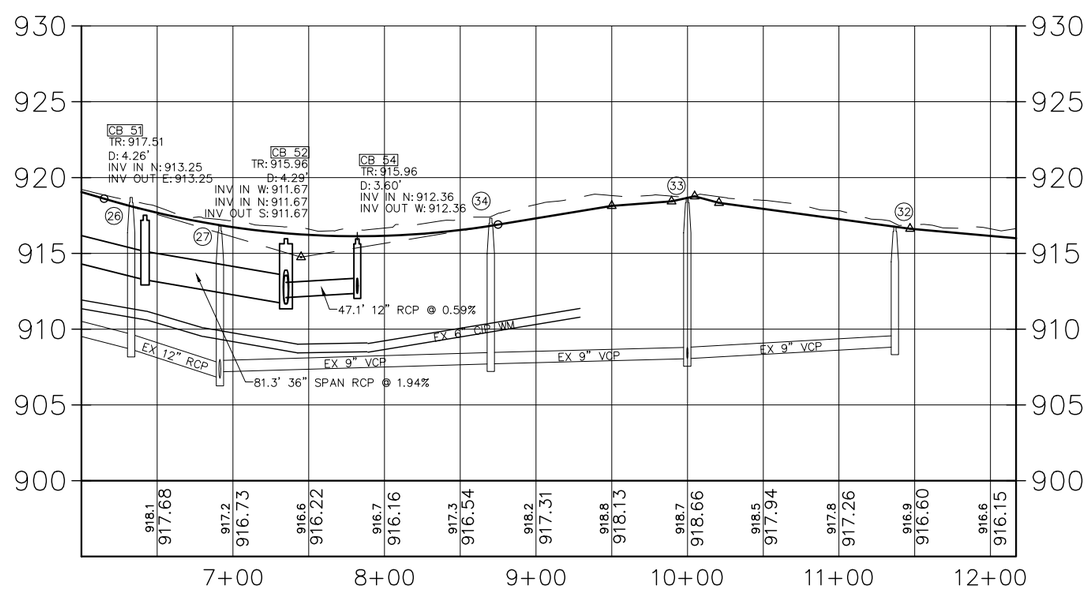

NO	DATE	BY	CKD	APPR	REVISION

I hereby certify that this plan, specification or report was prepared by me or under my direct supervision and that I am a duly Licensed Professional Engineer under the laws of the State of Minnesota.

Signature: MICHAEL J. PAYNE

Date: 3–13–18 License#: 50484

City of Plymouth

PLYMOUTH, MINNESOTA
KILMER PARK STREET RECONSTRUCTION

STORM SEWER PLAN & PROFILE

27TH AVE – 6+00 – 12+16.92

STATE AID PROJECT NO. ----	DRAWN BY M. PAYNE	DATE 2–18
COUNTY PROJECT NO. ----	DESIGNED BY M. PAYNE	2–18
CITY PROJECT NO. ST189001.001	CHECKED BY M. PAYNE	2–18
	REVIEWED BY J. RENNEBERG	2–18

LEGEND

- LIMITS OF CONSTRUCTION
- EXISTING STORM SEWER / CULVERT
- PROPOSED STORM SEWER
- EXISTING SANITARY SEWER
- EXISTING WATER MAIN
- PROPOSED WATER MAIN
- PROPOSED SUBSURFACE DRAIN
- SURFACE FLOW DIRECTION
- EXISTING CATCH BASIN
- EXISTING STORM SEWER MANHOLE
- EXISTING APRON
- EXISTING STRUCTURE NUMBER
- PROPOSED CATCH BASIN
- PROPOSED STORM SEWER MANHOLE
- PROPOSED STORM SEWER APRON
- PROPOSED STRUCTURE NUMBER
- EXISTING SANITARY SEWER MANHOLE
- EXISTING HYDRANT
- PROPOSED HYDRANT
- EXISTING GATE VALVE
- PROPOSED GATE VALVE
- PROPOSED YARD DRAIN

GENERAL NOTES:

1. SEE EXISTING STRUCTURE SCHEDULE SHEET 41 FOR ADDITIONAL WORK TO EXISTING STRUCTURES.
2. PROPOSED STORM SEWER LATERAL PROFILES SHOWN ON SHEETS 52–54.
3. SEE SHEETS 55–57 FOR DITCH GRADING PLANS & PROFILES
4. CONTRACTOR IS TO KEEP TH 169 RAMPS OPEN DURING CONSTRUCTION UNLESS APPROVED BY ENGINEER AND MNDOT. CONTRACTOR SHALL OBTAIN ALL NECESSARY PERMITTING.

NOTES

- (A) CONNECT TO EXISTING STORM SEWER.
- (B) CONNECT TO EXISTING DRAINAGE STRUCTURE.
- (C) INSTALL CULVERT. SEE SHEET 41.
- (D) INSTALL YARD DRAIN BOX.
- (E) RIP RAP / SEE DETAIL SHEET 7.
- (F) INSTALL DRAIN BASIN. SEE DETAIL SHEET 15 & STRUCTURE SCHEDULE SHEETS 42–43.

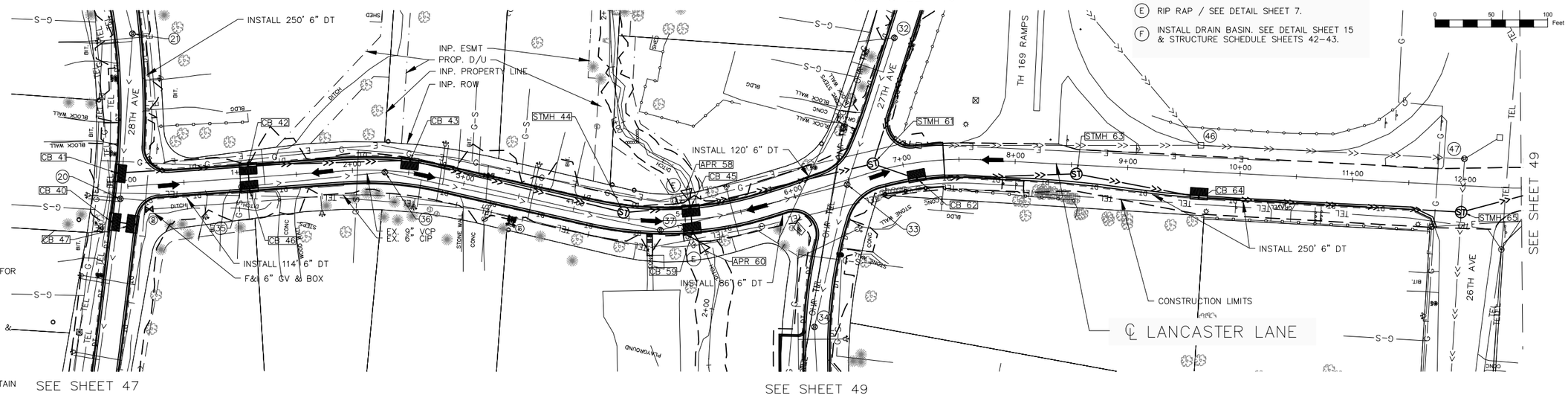

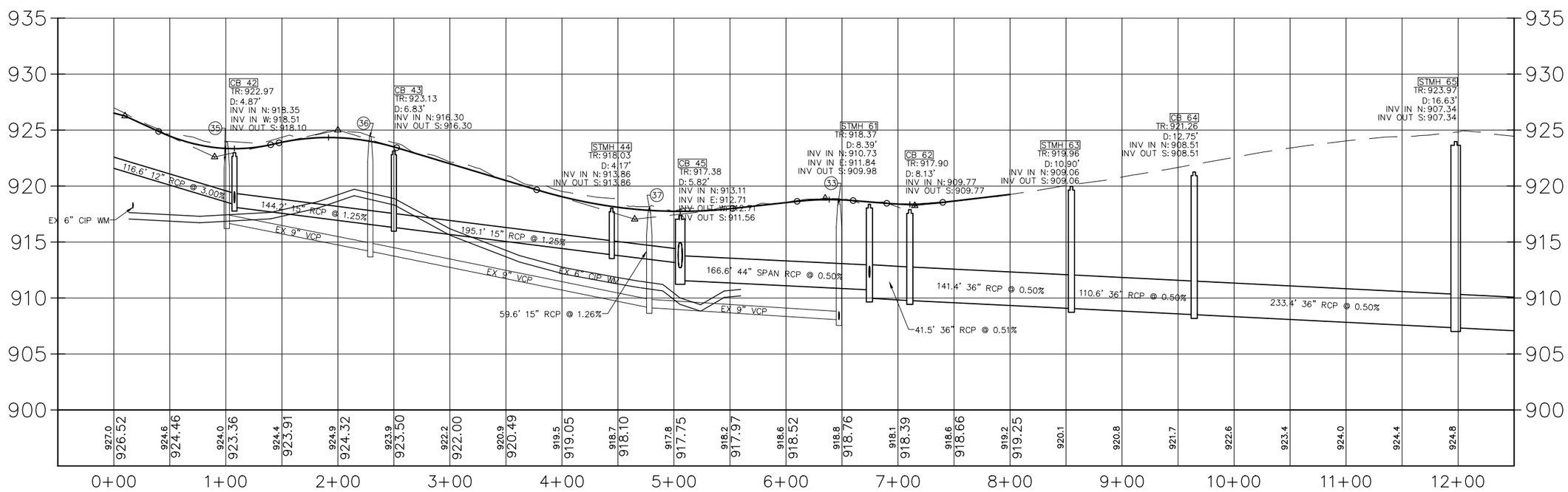

NO	DATE	BY	CKD	APPR	REVISION

I hereby certify that this plan, specification or report was prepared by me or under my direct supervision and that I am a duly Licensed Professional Engineer under the laws of the State of Minnesota.

Signature: MICHAEL J. PAYNE

Date: 3–13–18 License#: 50484

City of Plymouth

PLYMOUTH, MINNESOTA
KILMER PARK STREET RECONSTRUCTION

STORM SEWER PLAN & PROFILE

KILMER LANE – 0+00 – 12+50

STATE AID PROJECT NO.	DRAWN BY	DATE
–	M. PAYNE	2–18
COUNTY PROJECT NO.	DESIGNED BY	
– – – –	M. PAYNE	2–18
CITY PROJECT NO.	CHECKED BY	
ST189001.001	M. PAYNE	2–18
	REVIEWED BY	
	J. RENNEBERG	2–18

LEGEND

- LIMITS OF CONSTRUCTION
- EXISTING STORM SEWER / CULVERT
- PROPOSED STORM SEWER
- EXISTING SANITARY SEWER
- EXISTING WATER MAIN
- PROPOSED WATER MAIN
- PROPOSED SUBSURFACE DRAIN
- SURFACE FLOW DIRECTION
- EXISTING CATCH BASIN
- EXISTING STORM SEWER MANHOLE
- EXISTING APRON
- EXISTING STRUCTURE NUMBER
- PROPOSED CATCH BASIN
- PROPOSED STORM SEWER MANHOLE
- PROPOSED STORM SEWER APRON
- PROPOSED STRUCTURE NUMBER
- EXISTING SANITARY SEWER MANHOLE
- EXISTING HYDRANT
- PROPOSED HYDRANT
- EXISTING GATE VALVE
- PROPOSED GATE VALVE
- PROPOSED YARD DRAIN

GENERAL NOTES:

1. SEE EXISTING STRUCTURE SCHEDULE SHEET 41 FOR ADDITIONAL WORK TO EXISTING STRUCTURES.
2. PROPOSED STORM SEWER LATERAL PROFILES SHOWN ON SHEETS 52–54.

NOTES

- (A) CONNECT TO EXISTING STORM SEWER.
- (B) CONNECT TO EXISTING DRAINAGE STRUCTURE.
- (C) INSTALL CULVERT. SEE SHEET 41.
- (D) INSTALL YARD DRAIN BOX.
- (E) RIP RAP / SEE DETAIL SHEET 7.
- (F) INSTALL DRAIN BASIN. SEE DETAIL SHEET 15 & STRUCTURE SCHEDULE SHEETS 42–43.

HYDRODYNAMIC SEPARATOR:

STMH 66 SHALL BE PROPOSED LOCATION FOR HYDRODYNAMIC SEPARATOR SITE 2. SEE PROJECT SPECIFICATIONS FOR INFORMATION.

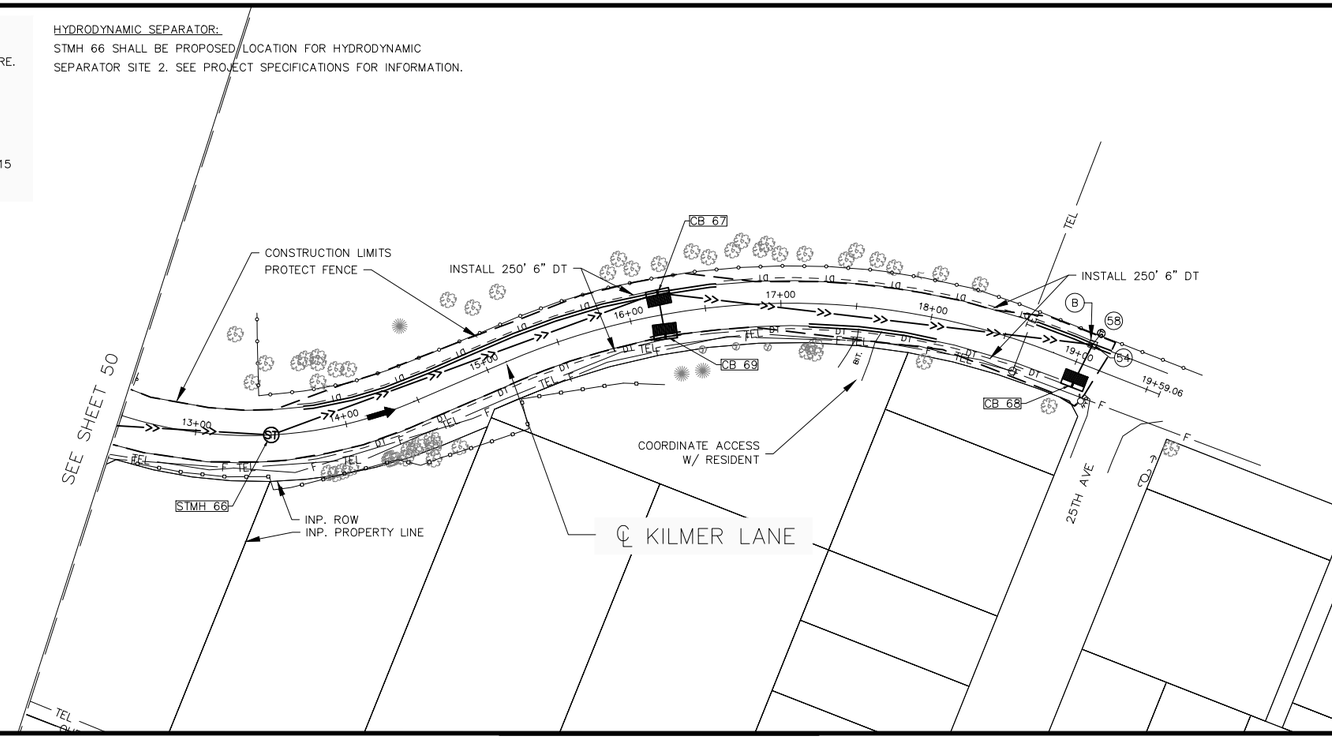

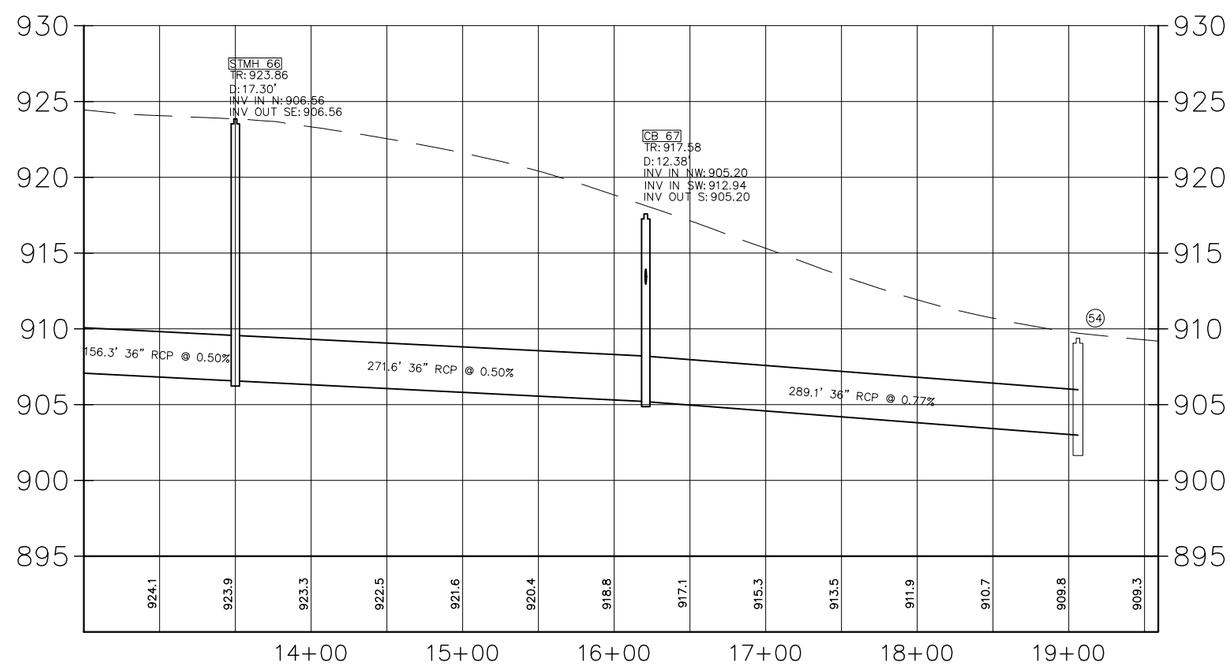

NO	DATE	BY	CKD	APPR	REVISION

I hereby certify that this plan, specification or report was prepared by me or under my direct supervision and that I am a duly Licensed Professional Engineer under the laws of the State of Minnesota.

Signature: MICHAEL J. PAYNE

Date: 3–13–18 License#: 50484

City of Plymouth

PLYMOUTH, MINNESOTA
KILMER PARK STREET RECONSTRUCTION

STORM SEWER PLAN & PROFILE

KILMER LANE – 12+50 – 19+59.06

STATE AID PROJECT NO.	DRAWN BY	DATE
----	M. PAYNE	2–18
COUNTY PROJECT NO.	DESIGNED BY	
----	M. PAYNE	2–18
	CHECKED BY	
CITY PROJECT NO.	M. PAYNE	2–18
ST189001.001	REVIEWED BY	
	J. RENNEBERG	2–18

EX CB 40 – EX CB 38 PROFILE

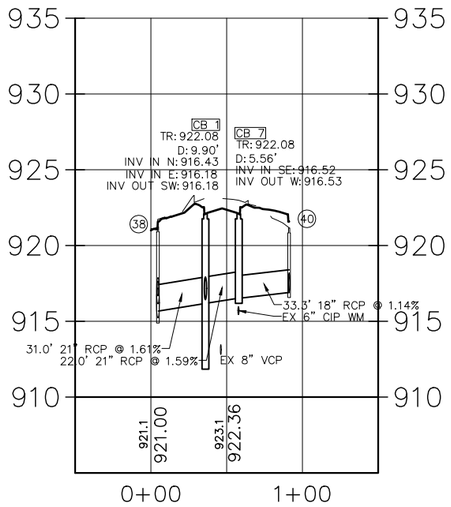

CB 9 – CB 8 PROFILE

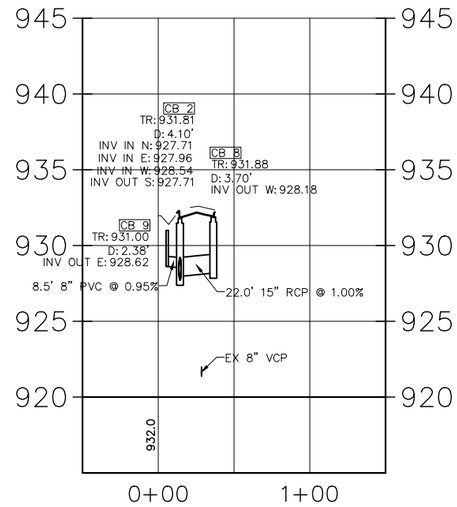

CB 11 – CB 3 PROFILE

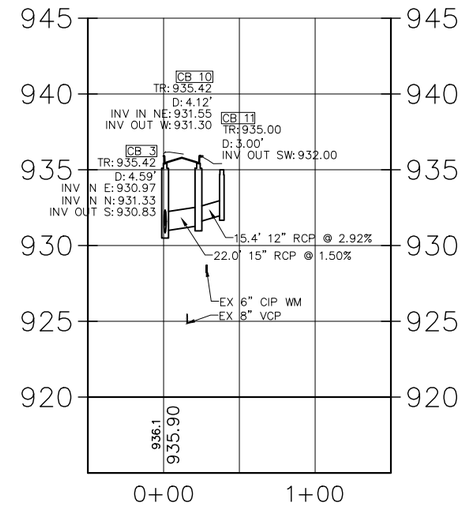

CB 6 – CB 4 PROFILE

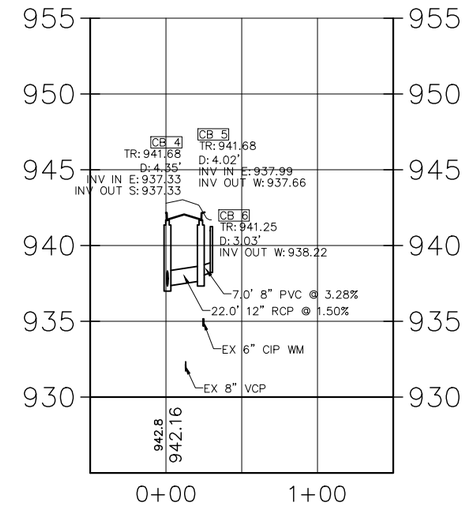

Nathan Lane (South) PROFILE

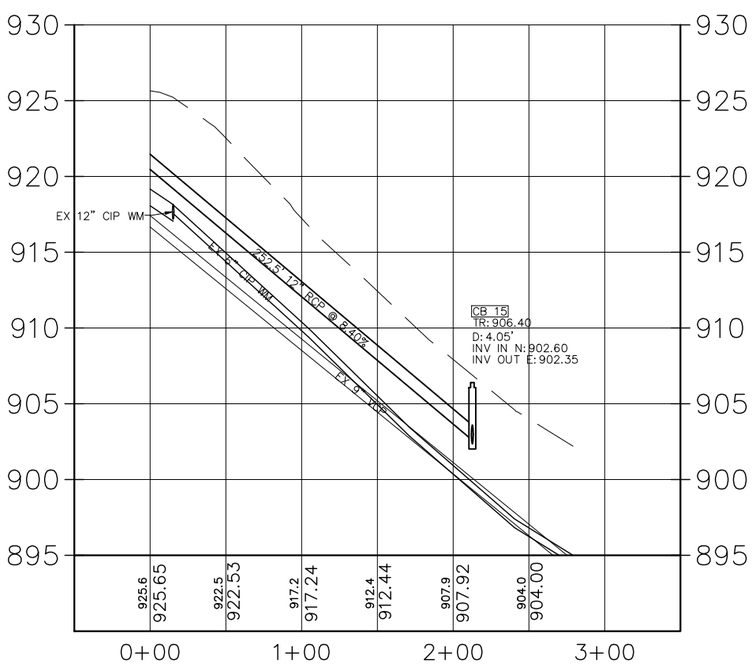

CB 19 – CB 16 PROFILE

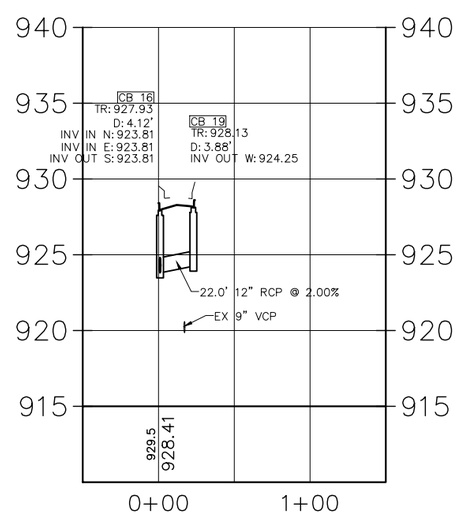

CB 18 – CB 17 PROFILE

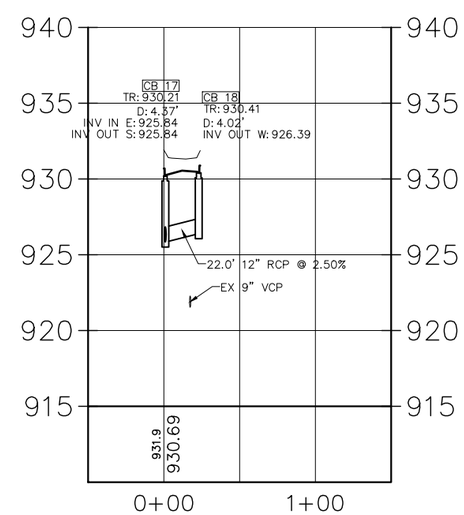

CB 15 – APR 13 PROFILE

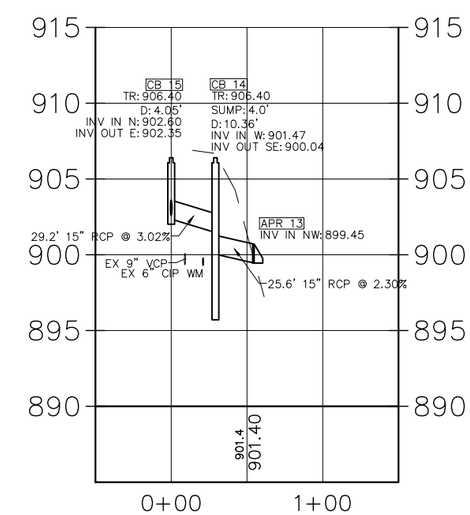

NO	DATE	BY	CKD	APPR	REVISION

I hereby certify that this plan, specification or report was prepared by me or under my direct supervision and that I am a duly Licensed Professional Engineer under the laws of the State of Minnesota.

Signature: MICHAEL J. PAYNE

Date: 3–13–18 License#: 50484

City of Plymouth

PLYMOUTH, MINNESOTA
KILMER PARK STREET RECONSTRUCTION

STORM SEWER
PROFILES

STATE AID PROJECT NO.	DRAWN BY	DATE
----	M. PAYNE	2–18
COUNTY PROJECT NO.	DESIGNED BY	
----	M. PAYNE	2–18
CITY PROJECT NO.	CHECKED BY	
ST189001.001	M. PAYNE	2–18
	REVIEWED BY	
	J. RENNEBERG	2–18

CB 24 – CB 21 PROFILE

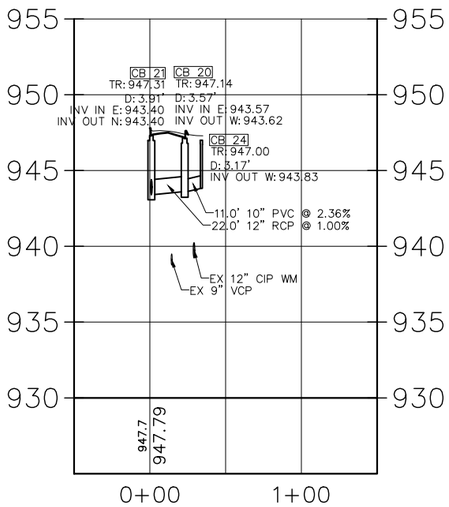

CB 25 – CB 27 PROFILE

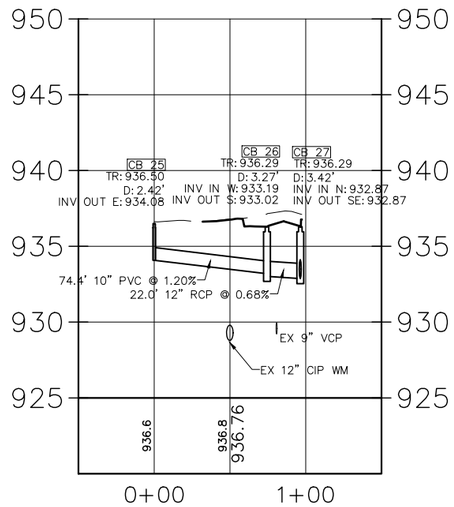

CB 28 – STMH 23 PROFILE

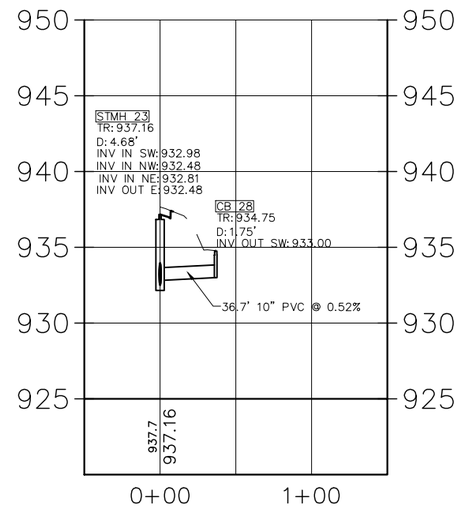

CB 38 – CB 30 PROFILE

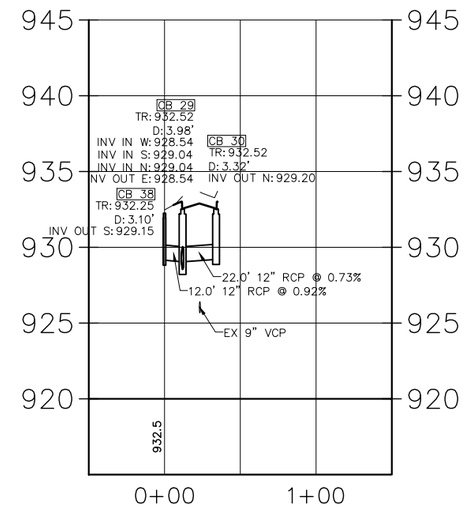

STMH 37 – STMH 35 PROFILE

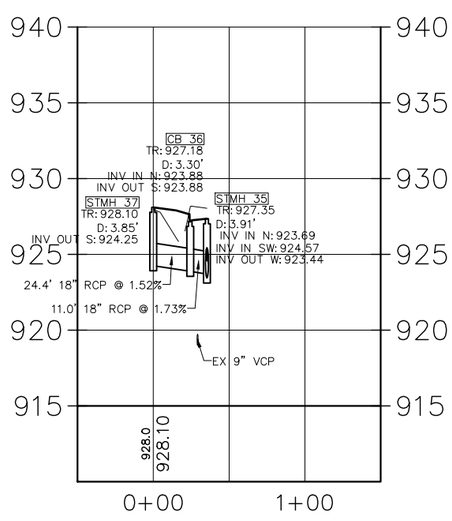

CB 47 – CB 40 PROFILE

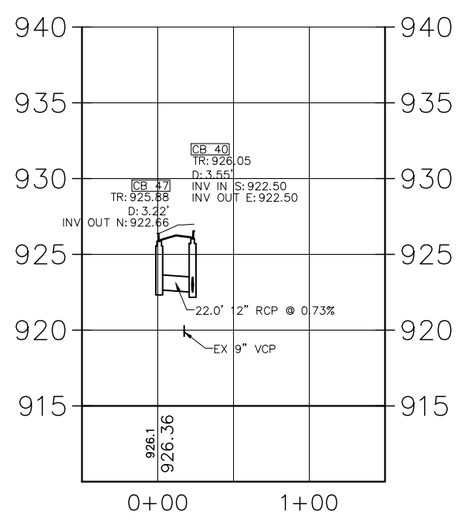

STMH 34 – CB 32 PROFILE

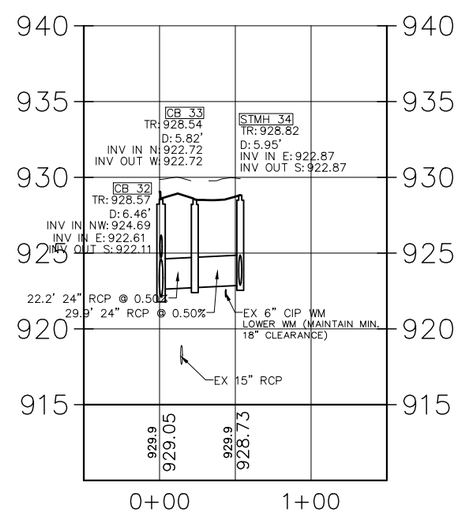

CB 49 – CB 50 PROFILE

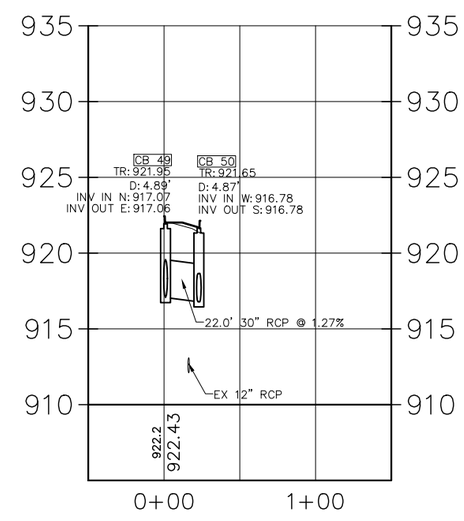

NO	DATE	BY	CKD	APPR	REVISION

I hereby certify that this plan, specification or report was prepared by me or under my direct supervision and that I am a duly Licensed Professional Engineer under the laws of the State of Minnesota.

Signature: MICHAEL J. PAYNE

Date: 3–13–18 License#: 50484

City of Plymouth

PLYMOUTH, MINNESOTA
KILMER PARK STREET RECONSTRUCTION

STORM SEWER
PROFILES

STATE AID PROJECT NO.	DRAWN BY	DATE
–––	M. PAYNE	2–18
COUNTY PROJECT NO.	DESIGNED BY	
–––	M. PAYNE	2–18
CITY PROJECT NO.	CHECKED BY	
ST189001.001	M. PAYNE	2–18
	REVIEWED BY	
	J. RENNEBERG	2–18

CB 55 – CB 54 PROFILE

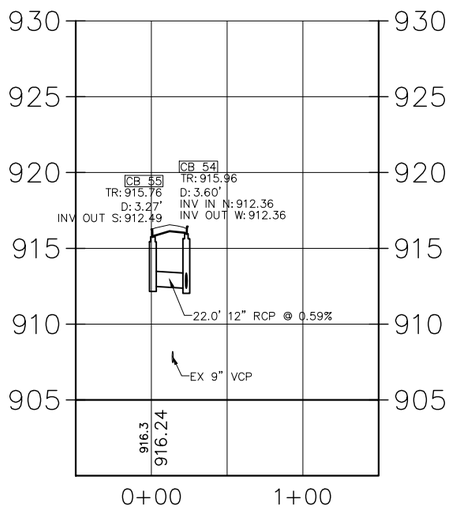

APR 52A – APR 53A PROFILE

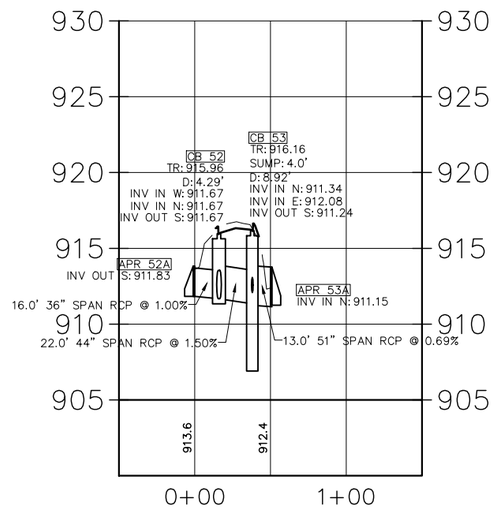

CB 71 – CB 70 PROFILE

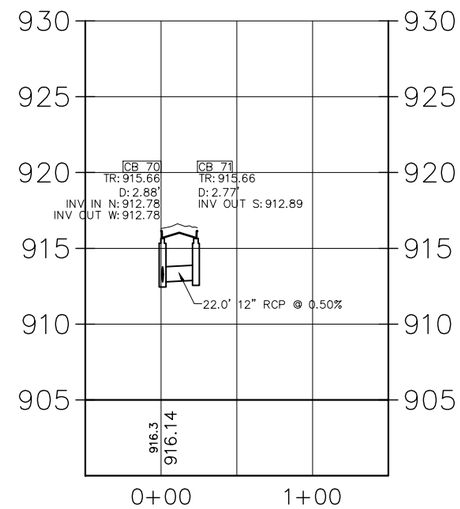

CB 46 – CB 42 PROFILE

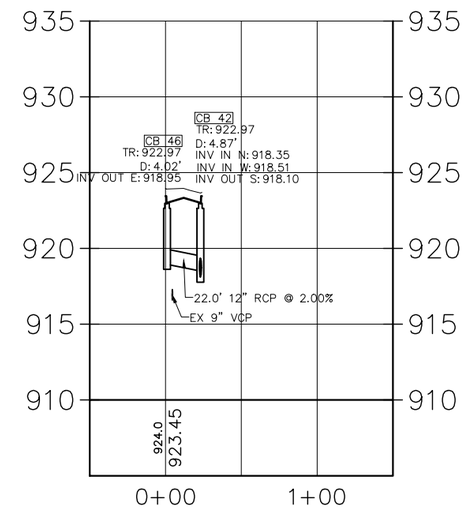

APR 60 – APR 58 PROFILE

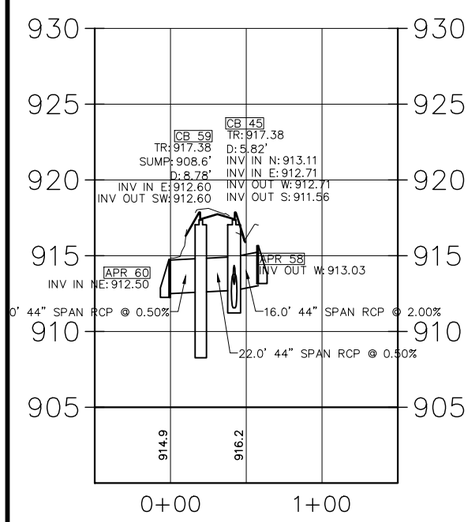

CB 69 – CB 67 PROFILE

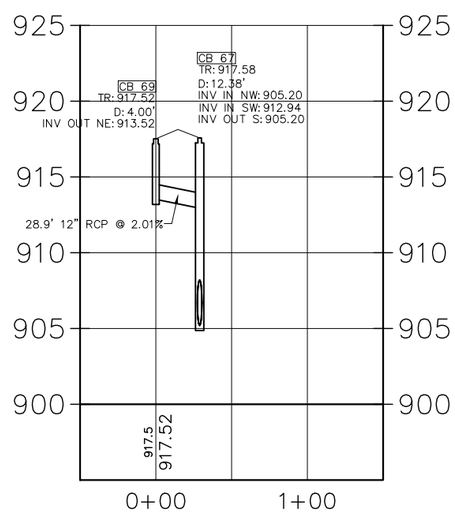

CB 68 – 54 PROFILE

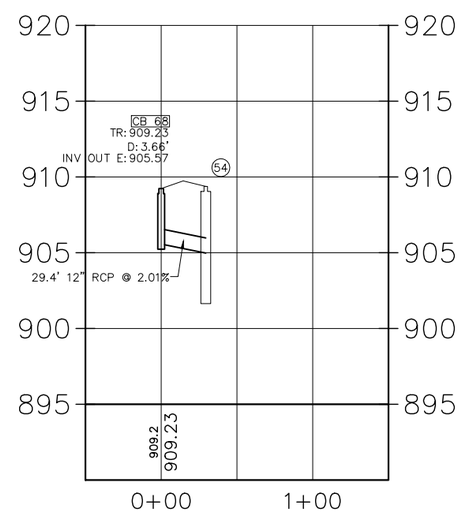

CB 72 – STMH 35 PROFILE

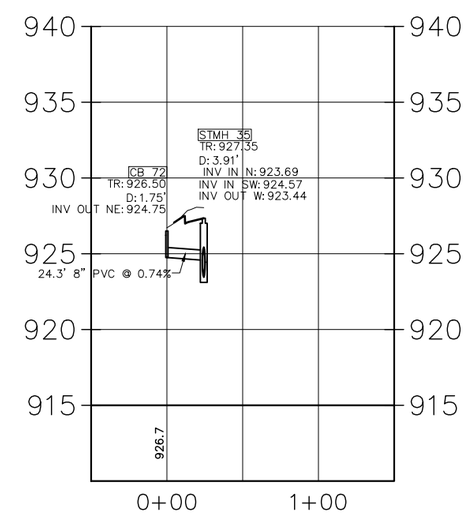

NO	DATE	BY	CKD	APPR	REVISION

I hereby certify that this plan, specification or report was prepared by me or under my direct supervision and that I am a duly Licensed Professional Engineer under the laws of the State of Minnesota.

Signature: MICHAEL J. PAYNE

Date: 3–13–18 License#: 50484

City of Plymouth

PLYMOUTH, MINNESOTA
KILMER PARK STREET RECONSTRUCTION

STORM SEWER
PROFILES

STATE AID PROJECT NO.	DRAWN BY	DATE
–––	M. PAYNE	2–18
COUNTY PROJECT NO.	DESIGNED BY	
–––	M. PAYNE	2–18
CITY PROJECT NO.	CHECKED BY	
ST189001.001	M. PAYNE	2–18
	REVIEWED BY	
	J. RENNEBERG	2–18

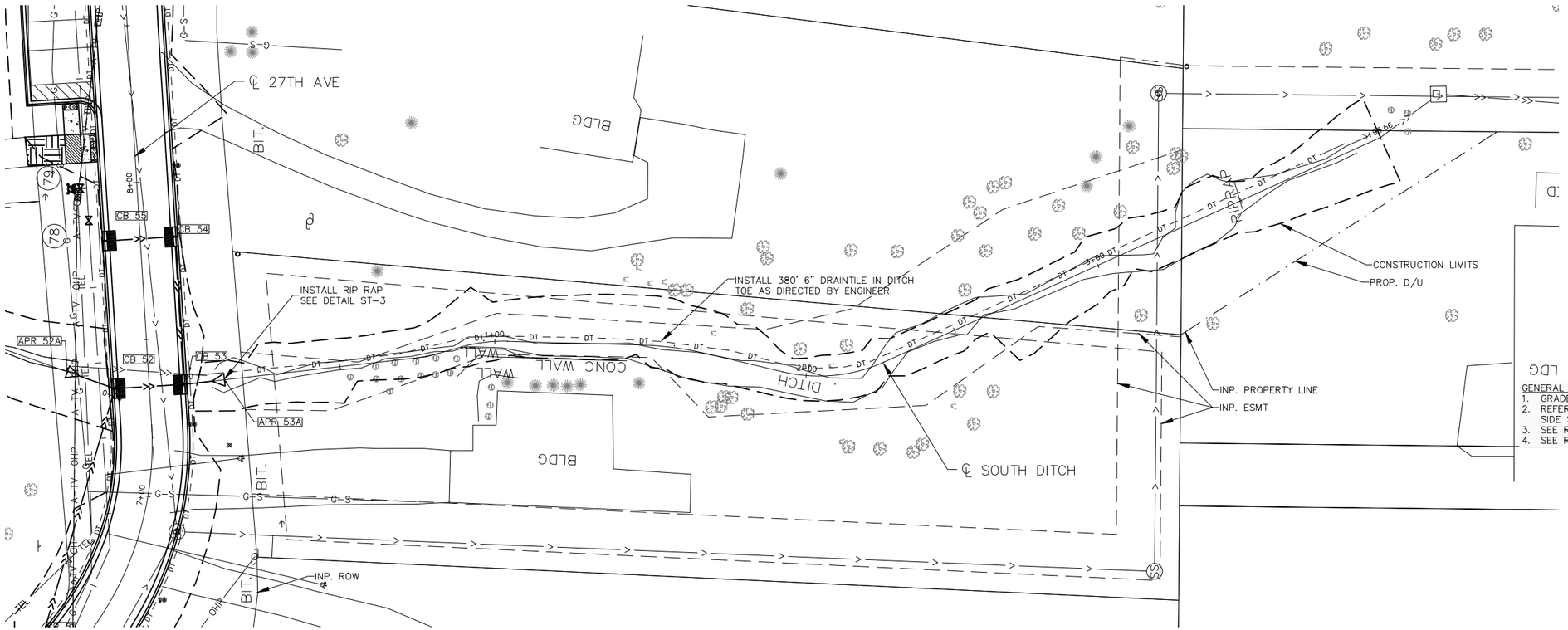

LEGEND

- LIMITS OF CONSTRUCTION
- EXISTING STORM SEWER / CULVERT
- PROPOSED STORM SEWER
- EXISTING SANITARY SEWER
- EXISTING WATER MAIN
- PROPOSED WATER MAIN
- PROPOSED SUBSURFACE DRAIN
- SURFACE FLOW DIRECTION
- EXISTING CATCH BASIN
- EXISTING STORM SEWER MANHOLE
- EXISTING APRON
- EXISTING STRUCTURE NUMBER
- PROPOSED CATCH BASIN
- PROPOSED STORM SEWER MANHOLE
- PROPOSED STORM SEWER APRON
- PROPOSED STRUCTURE NUMBER
- EXISTING SANITARY SEWER MANHOLE
- EXISTING HYDRANT
- PROPOSED HYDRANT
- EXISTING GATE VALVE
- PROPOSED GATE VALVE
- EXISTING CURB STOP
- PROPOSED CURB STOP

GENERAL NOTES:

1. GRADE DITCHES AS DIRECTED BY ENGINEER.
2. REFER TO CROSS SECTIONS AND SIDE SLOPE TABLE FOR DITCH SIDE SLOPES.
3. SEE REMOVAL SHEETS 19–22 FOR TREE REMOVALS.
4. SEE RESTORATION SHEET 60 FOR RESTORATION INFORMATION.

0 50 100 Feet

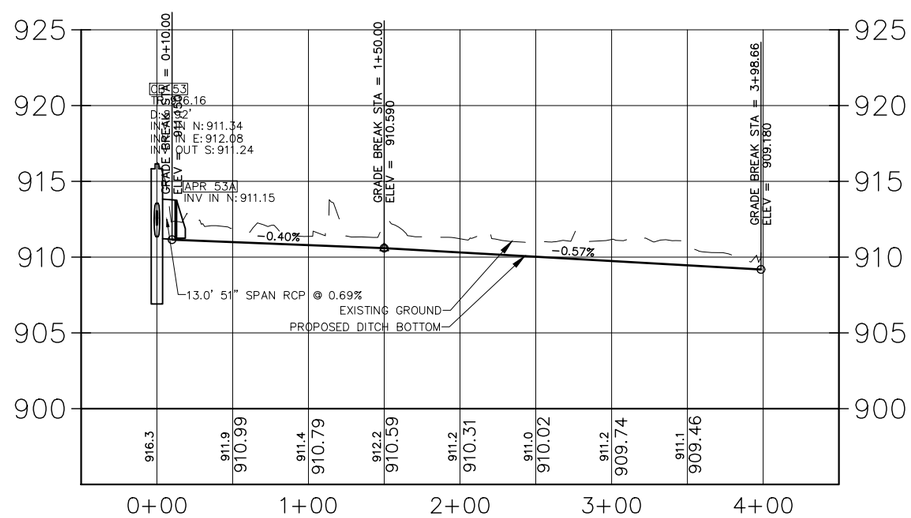

SOUTH DITCH SIDE SLOPES		
STATION	LEFT SLOPE	RIGHT SLOPE
0+10	2:1	2:1
0+55		1:1
0+95	1.5:1	
1+50		3:1*
1+75	2:1	
2+25	3:1*	

* OR FLATTER

NO	DATE	BY	CKD	APPR	REVISION

I hereby certify that this plan, specification or report was prepared by me or under my direct supervision and that I am a duly Licensed Professional Engineer under the laws of the State of Minnesota.

Signature: MICHAEL J. PAYNE

Date: 3–13–18 License#: 50484

City of Plymouth

PLYMOUTH, MINNESOTA
KILMER PARK STREET
RECONSTRUCTION

DITCH DRAINAGE PLANS & PROFILES

SOUTH DITCH

STATE AID PROJECT NO. ____	DRAWN BY M. PAYNE	DATE 2–18
COUNTY PROJECT NO. ____	DESIGNED BY M. PAYNE	2–18
CITY PROJECT NO. ST189001.001	CHECKED BY M. PAYNE	2–18
	REVIEWED BY J. RENNEBERG	2–18

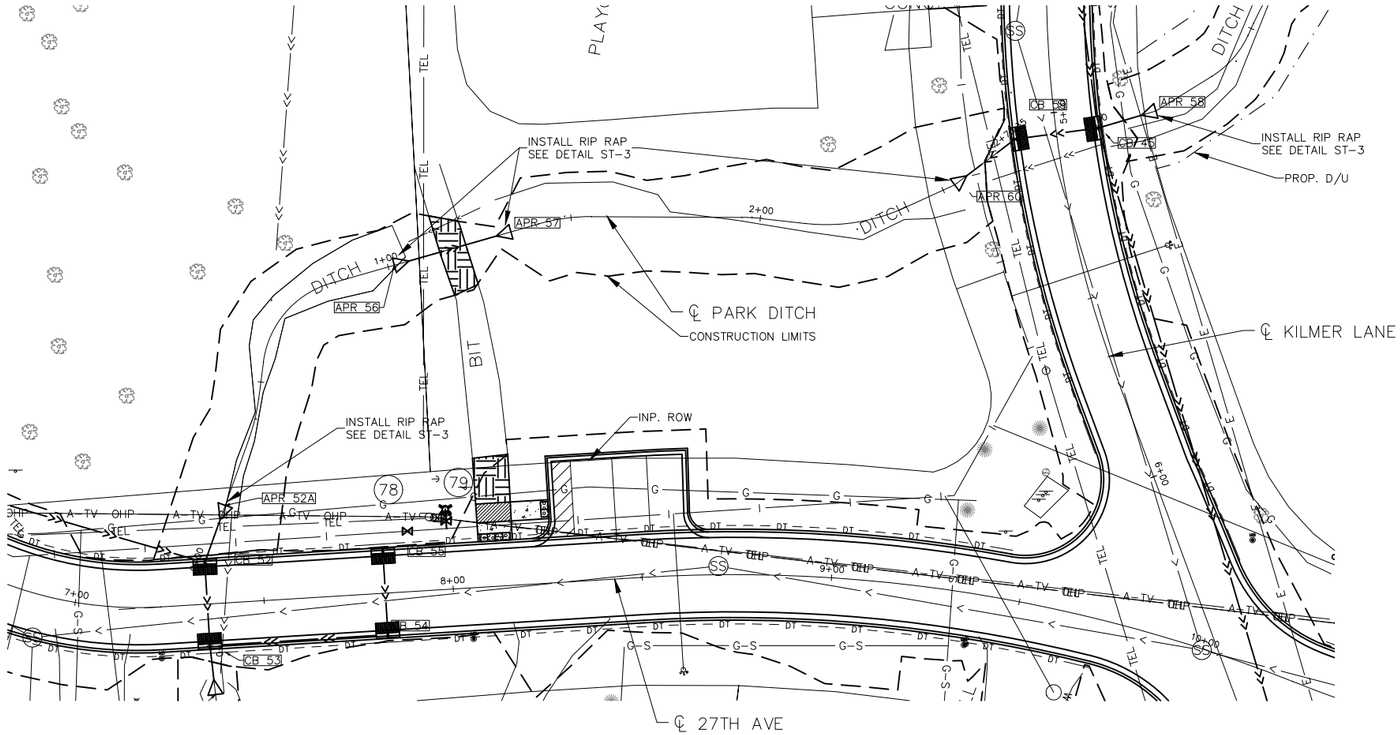

LEGEND

- LIMITS OF CONSTRUCTION
- EXISTING STORM SEWER / CULVERT
- PROPOSED STORM SEWER
- EXISTING SANITARY SEWER
- EXISTING WATER MAIN
- PROPOSED WATER MAIN
- PROPOSED SUBSURFACE DRAIN
- SURFACE FLOW DIRECTION
- EXISTING CATCH BASIN
- EXISTING STORM SEWER MANHOLE
- EXISTING APRON
- EXISTING STRUCTURE NUMBER
- PROPOSED CATCH BASIN
- PROPOSED STORM SEWER MANHOLE
- PROPOSED STORM SEWER APRON
- PROPOSED STRUCTURE NUMBER
- EXISTING SANITARY SEWER MANHOLE
- EXISTING HYDRANT
- PROPOSED HYDRANT
- EXISTING GATE VALVE
- PROPOSED GATE VALVE
- EXISTING CURB STOP
- PROPOSED CURB STOP

GENERAL NOTES:

1. GRADE DITCHES AS DIRECTED BY ENGINEER.
2. REFER TO CROSS SECTIONS AND DETAIL FOR DITCH SIDE SLOPES.
3. SEE REMOVAL SHEETS 19–22 FOR TREE REMOVALS.
4. SEE RESTORATION SHEET 60 FOR RESTORATION INFORMATION.

N

0 50 100 Feet

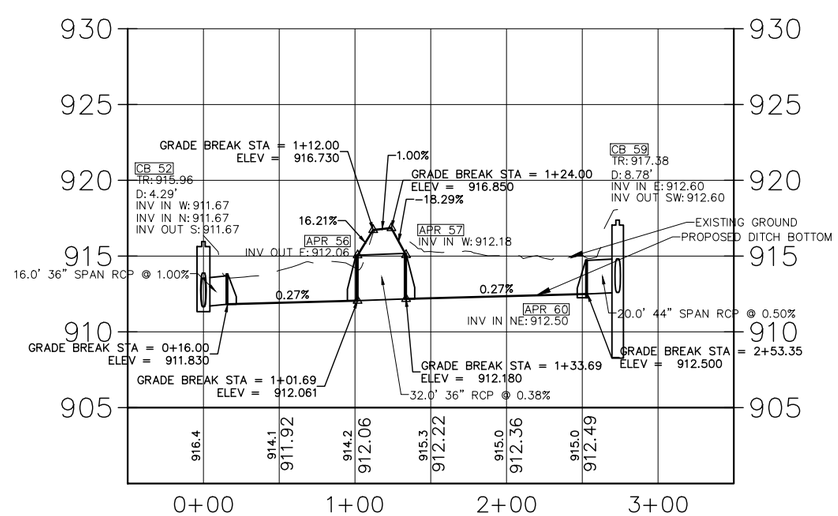

NO	DATE	BY	CKD	APPR	REVISION

I hereby certify that this plan, specification or report was prepared by me or under my direct supervision and that I am a duly Licensed Professional Engineer under the laws of the State of Minnesota.

Signature: MICHAEL J. PAYNE

Date: 3–13–18 License#: 50484

City of Plymouth

PLYMOUTH, MINNESOTA
KILMER PARK STREET RECONSTRUCTION

DITCH DRAINAGE PLANS & PROFILES

PARK DITCH

STATE AID PROJECT NO.	DRAWN BY	DATE
----	M. PAYNE	2–18
COUNTY PROJECT NO.	DESIGNED BY	
----	M. PAYNE	2–18
	CHECKED BY	
CITY PROJECT NO.	M. PAYNE	2–18
ST189001.001	REVIEWED BY	
	J. RENNEBERG	2–18

SHEET 56 OF 106

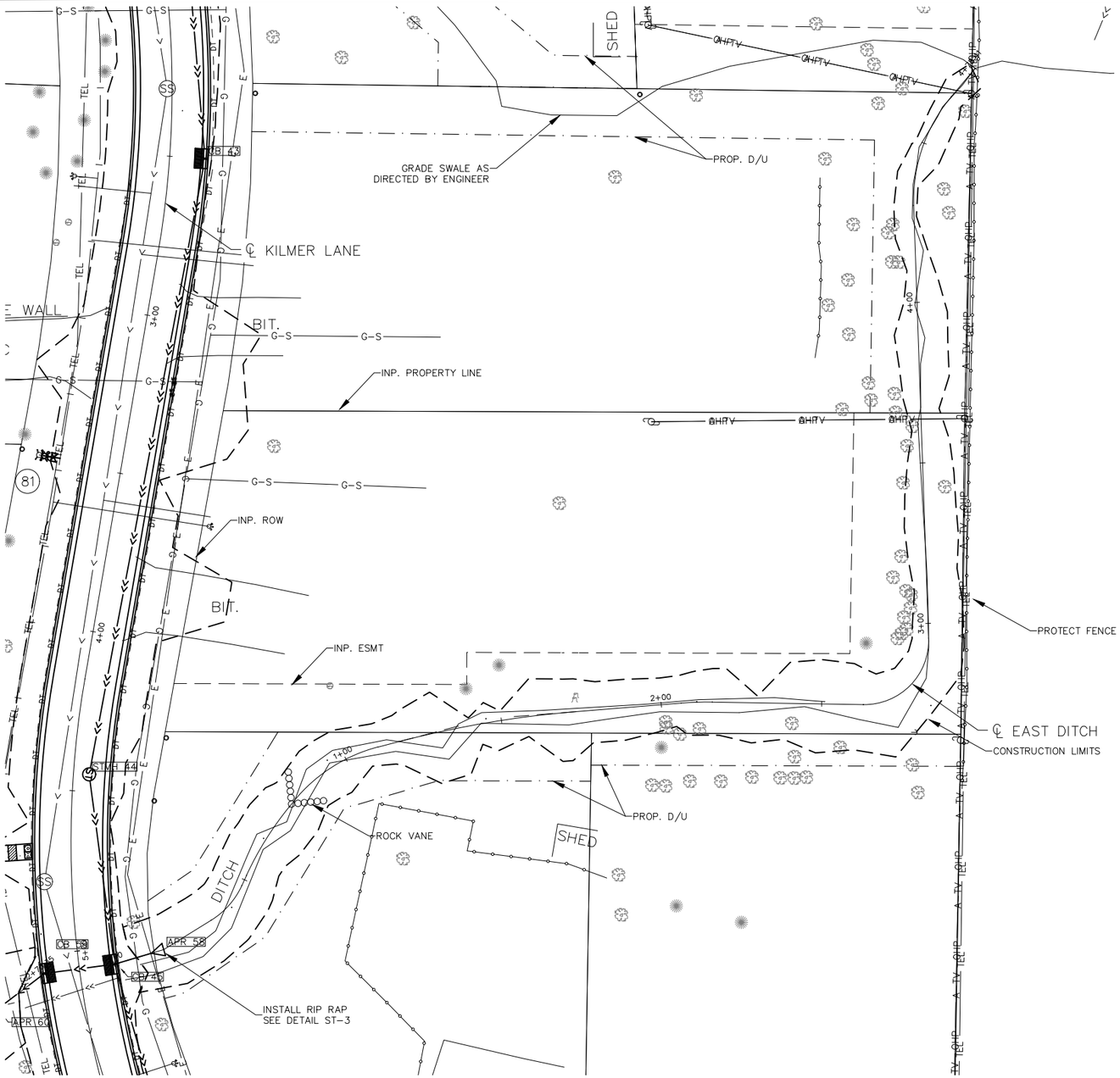

LEGEND

- LIMITS OF CONSTRUCTION
- EXISTING STORM SEWER / CULVERT
- PROPOSED STORM SEWER
- EXISTING SANITARY SEWER
- EXISTING WATER MAIN
- PROPOSED WATER MAIN
- PROPOSED SUBSURFACE DRAIN
- SURFACE FLOW DIRECTION
- EXISTING CATCH BASIN
- EXISTING STORM SEWER MANHOLE
- EXISTING APRON
- EXISTING STRUCTURE NUMBER
- PROPOSED CATCH BASIN
- PROPOSED STORM SEWER MANHOLE
- PROPOSED STORM SEWER APRON
- PROPOSED STRUCTURE NUMBER
- EXISTING SANITARY SEWER MANHOLE
- EXISTING HYDRANT
- PROPOSED HYDRANT
- EXISTING GATE VALVE
- PROPOSED GATE VALVE
- EXISTING CURB STOP
- PROPOSED CURB STOP

GENERAL NOTES:

1. GRADE DITCHES AS DIRECTED BY ENGINEER.
2. DITCH SIDE SLOPES SHALL BE GRADED AT 2:1 OR FLATTER. SEE CROSS SECTIONS.
3. SEE REMOVAL SHEETS 19–22 FOR TREE REMOVALS.
4. SEE RESTORATION SHEET 61 FOR RESTORATION INFORMATION.

N

0 50 100 Feet

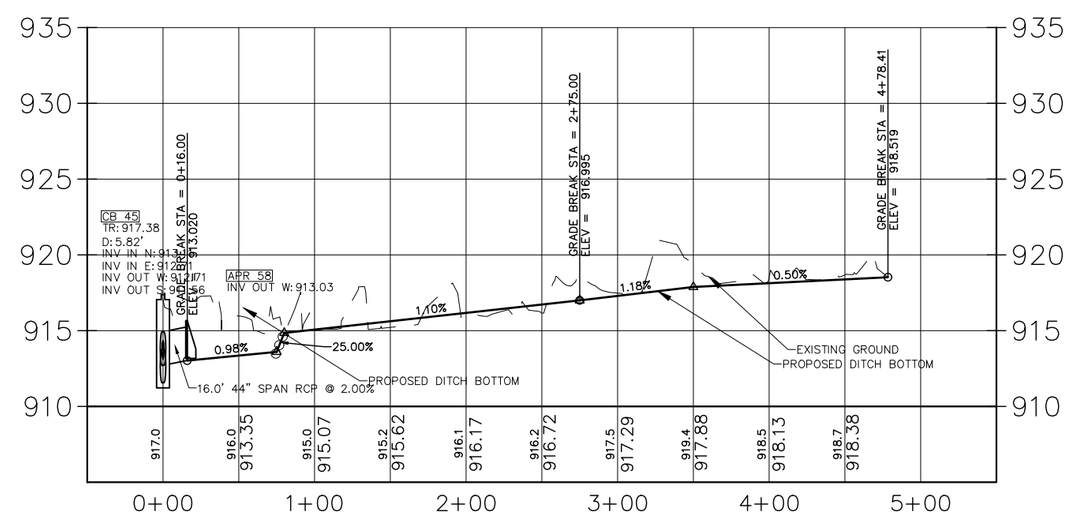

NO	DATE	BY	CKD	APPR	REVISION

I hereby certify that this plan, specification or report was prepared by me or under my direct supervision and that I am a duly Licensed Professional Engineer under the laws of the State of Minnesota.

Signature: MICHAEL J. PAYNE

Date: 3–13–18 License#: 50484

City of Plymouth

PLYMOUTH, MINNESOTA
KILMER PARK STREET RECONSTRUCTION

DITCH DRAINAGE PLANS & PROFILES

EAST DITCH

STATE AID PROJECT NO.	DRAWN BY	DATE
----	M. PAYNE	2–18
COUNTY PROJECT NO.	DESIGNED BY	
----	M. PAYNE	2–18
CITY PROJECT NO.	CHECKED BY	
ST189001.001	M. PAYNE	2–18
	REVIEWED BY	
	J. RENNEBERG	2–18

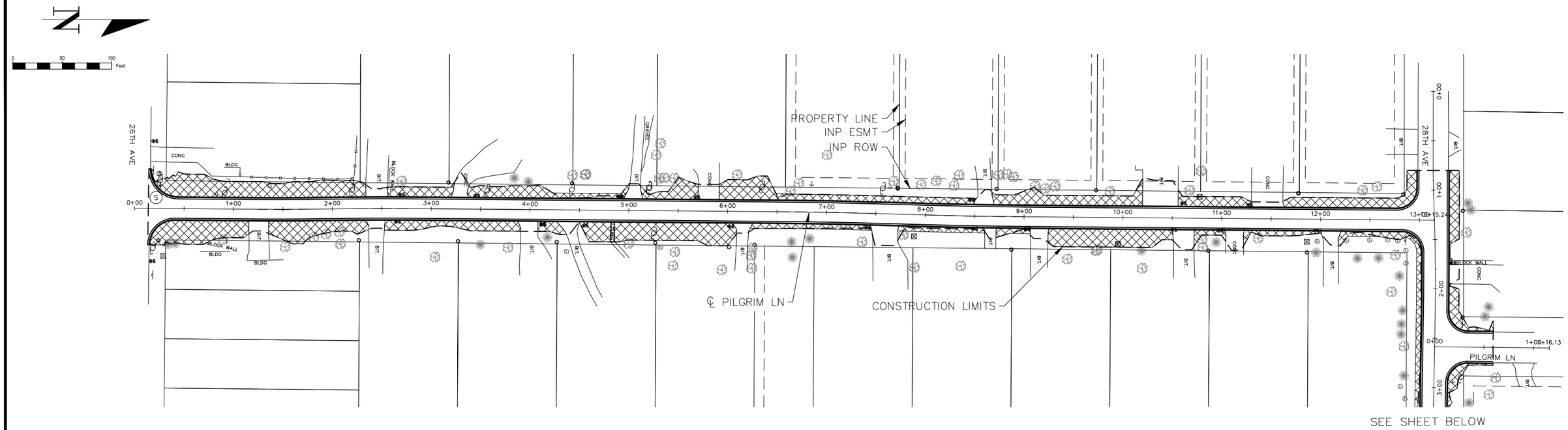

LEGEND

- SOD TYPE LAWN & BOULEVARD
- HYDROSEED: MNDOT MIX 25–151
- SEED: MNDOT MIX 34–261 W/ EROSION CONTROL BLANKET 4N
- RIPRAP
- SILT FENCE
- (R) RIPRAP AT STORM SEWER OUTLET
- (S) SUMP MANHOLE

NOTES:

- CONTRACTOR TO PROVIDE INLET PROTECTION AT ALL CATCH BASINS THAT RECEIVE RUNOFF FROM PROJECT
- CONTRACTOR SHALL PROVIDE AN APPROVED EROSION CONTROL CONSTRUCTION ENTRANCE AT BOTH ENDS OF PROJECT AS DIRECTED BY ENGINEER(INCIDENTAL)
- CONTRACTOR SHALL USE EROSION CONTROL BLANKET IN ADDITION TO HYDROSEED IN DITCH RESTORATION AREAS.
- EXPOSED SOILS IN DITCHES SHALL BE STABILIZED WITHIN 24 HOURS AFTER GRADING IS FINISHED.
- STREETS SHALL BE SWEPT AS DIRECTED BY ENGINEER.

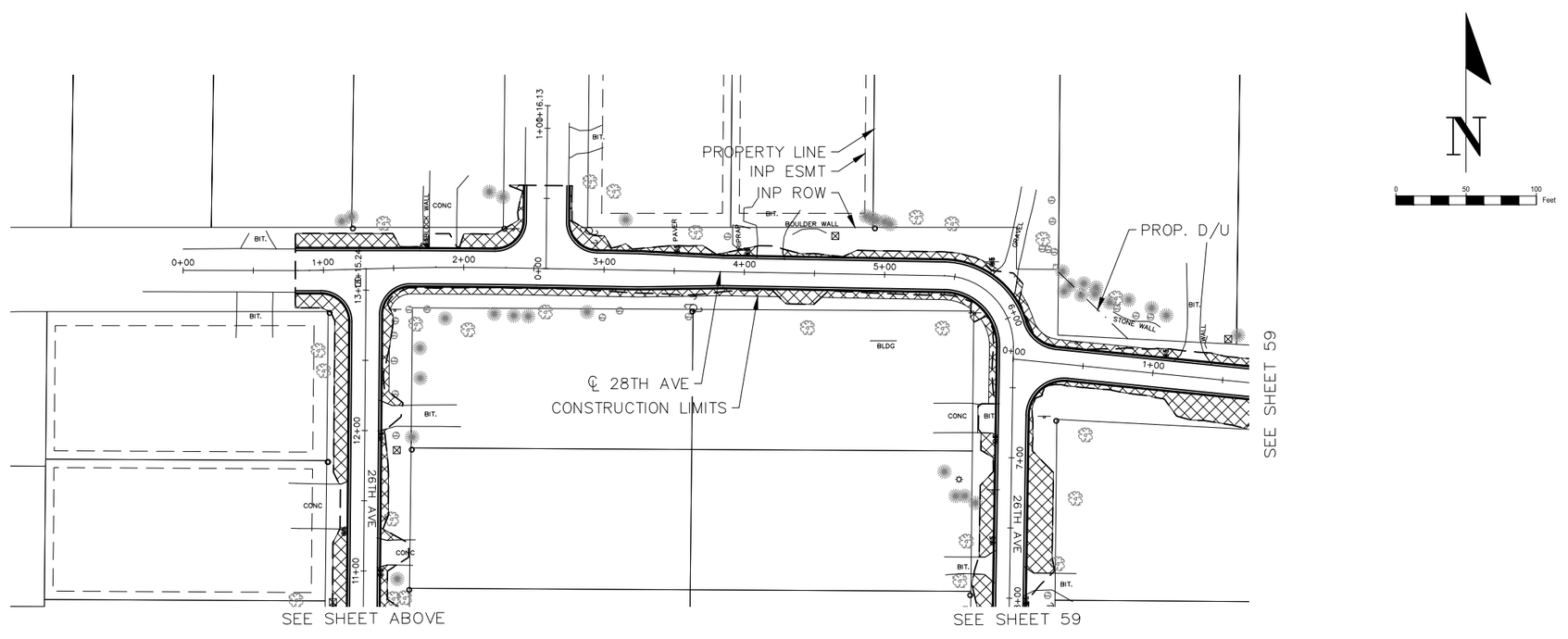

NO	DATE	BY	CKD	APPR	REVISION

I hereby certify that this plan, specification or report was prepared by me or under my direct supervision and that I am a duly Licensed Professional Engineer under the laws of the State of Minnesota.

Signature: MICHAEL J. PAYNE

Date: 3–13–18 License#: 50484

City of Plymouth

PLYMOUTH, MINNESOTA
KILMER PARK STREET RECONSTRUCTION

RESTORATION & EROSION CONTROL

PILGRIM LANE & 28TH AVE (WEST)

STATE AID PROJECT NO.	DRAWN BY	DATE
----	M. PAYNE	2–18
COUNTY PROJECT NO.	DESIGNED BY M. PAYNE	2–18
----	CHECKED BY M. PAYNE	2–18
CITY PROJECT NO. ST189001.001	REVIEWED BY J. RENNEBERG	2–18

SHEET 58 OF 106

LEGEND

- SOD TYPE LAWN & BOULEVARD
- HYDROSEED: MNDOT MIX 25-151
- SEED: MNDOT MIX 34-261 W/ EROSION CONTROL BLANKET 4N
- RIPRAP
- SILT FENCE
- (R) RIPRAP AT STORM SEWER OUTLET
- (S) SUMP MANHOLE

NOTES:

- CONTRACTOR TO PROVIDE INLET PROTECTION AT ALL CATCH BASINS THAT RECEIVE RUNOFF FROM PROJECT
- CONTRACTOR SHALL PROVIDE AN APPROVED EROSION CONTROL CONSTRUCTION ENTRANCE AT BOTH ENDS OF PROJECT AS DIRECTED BY ENGINEER(INCIDENTAL)
- CONTRACTOR SHALL USE EROSION CONTROL BLANKET IN ADDITION TO HYDROSEED IN DITCH RESTORATION AREAS.
- EXPOSED SOILS IN DITCHES SHALL BE STABILIZED WITHIN 24 HOURS AFTER GRADING IS FINISHED.
- STREETS SHALL BE SWEPT AS DIRECTED BY ENGINEER.

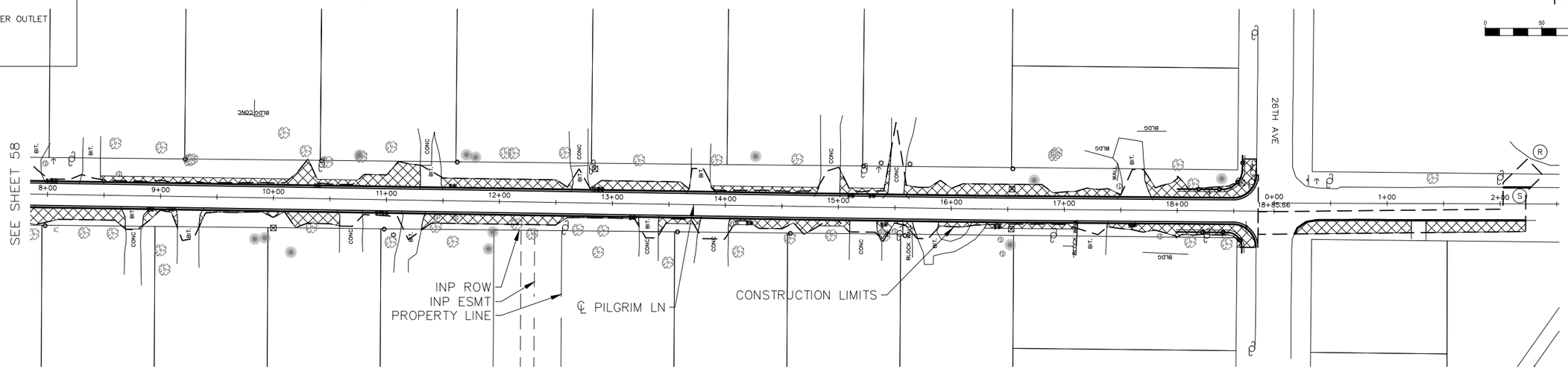

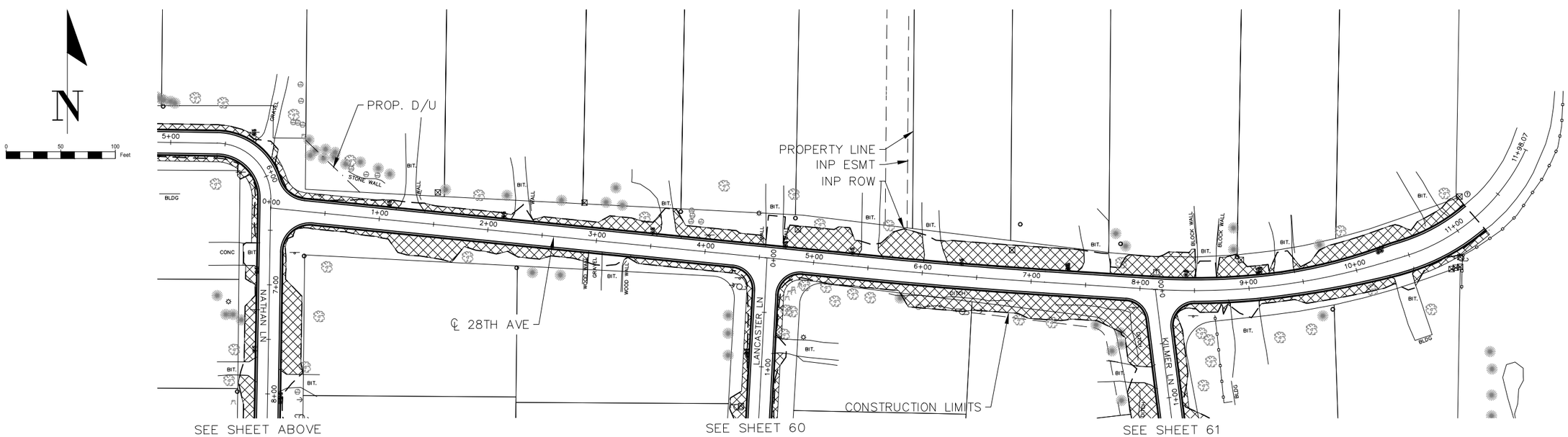

NO	DATE	BY	CKD	APPR	REVISION

I hereby certify that this plan, specification or report was prepared by me or under my direct supervision and that I am a duly Licensed Professional Engineer under the laws of the State of Minnesota.

Signature: MICHAEL J. PAYNE

Date: 3-13-18 License#: 50484

City of Plymouth

PLYMOUTH, MINNESOTA
KILMER PARK STREET RECONSTRUCTION

RESTORATION & EROSION CONTROL

NATHAN LANE & 28TH AVE (EAST)

STATE AID PROJECT NO.	DRAWN BY	DATE
----	M. PAYNE	2-18
COUNTY PROJECT NO.	DESIGNED BY	
----	M. PAYNE	2-18
	CHECKED BY	
CITY PROJECT NO.	M. PAYNE	2-18
	REVIEWED BY	
ST189001.001	J. RENNEBERG	2-18

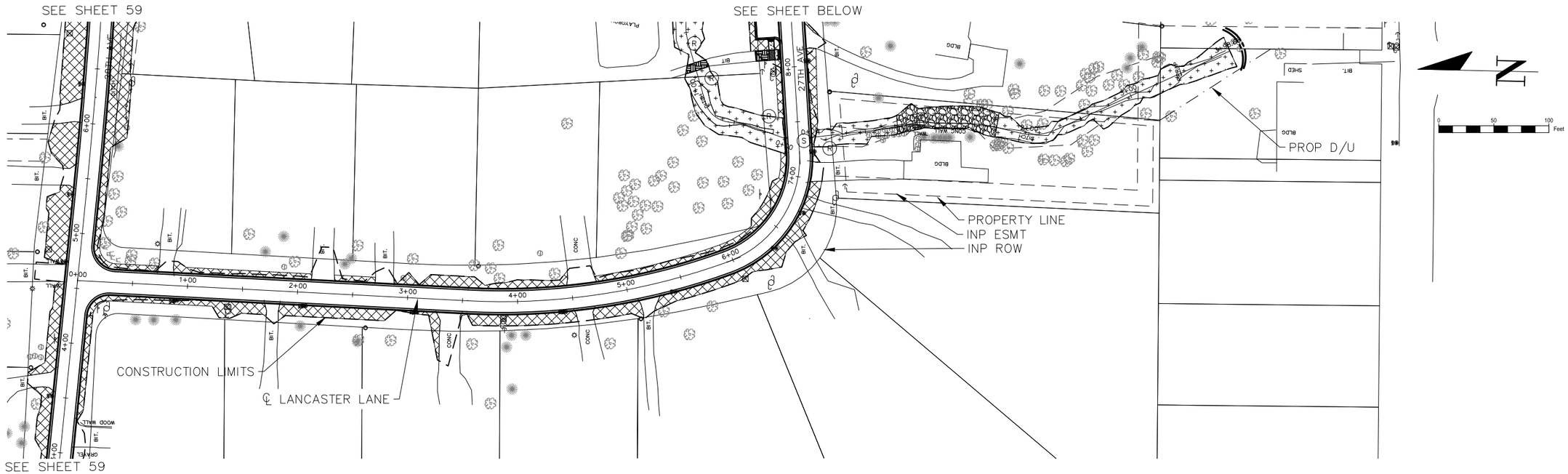

LEGEND

- SOD TYPE LAWN & BOULEVARD
- HYDROSEED: MNDOT MIX 25-151
- SEED: MNDOT MIX 34-261 W/ EROSION CONTROL BLANKET 4N
- RIPRAP
- SILT FENCE
- (R) RIPRAP AT STORM SEWER OUTLET
- (S) SUMP MANHOLE

NOTES:

- CONTRACTOR TO PROVIDE INLET PROTECTION AT ALL CATCH BASINS THAT RECEIVE RUNOFF FROM PROJECT
- CONTRACTOR SHALL PROVIDE AN APPROVED EROSION CONTROL CONSTRUCTION ENTRANCE AT BOTH ENDS OF PROJECT AS DIRECTED BY ENGINEER(INCIDENTAL)
- CONTRACTOR SHALL USE EROSION CONTROL BLANKET IN ADDITION TO HYDROSEED IN DITCH RESTORATION AREAS.
- EXPOSED SOILS IN DITCHES SHALL BE STABILIZED WITHIN 24 HOURS AFTER GRADING IS FINISHED.
- STREETS SHALL BE SWEPT AS DIRECTED BY ENGINEER.

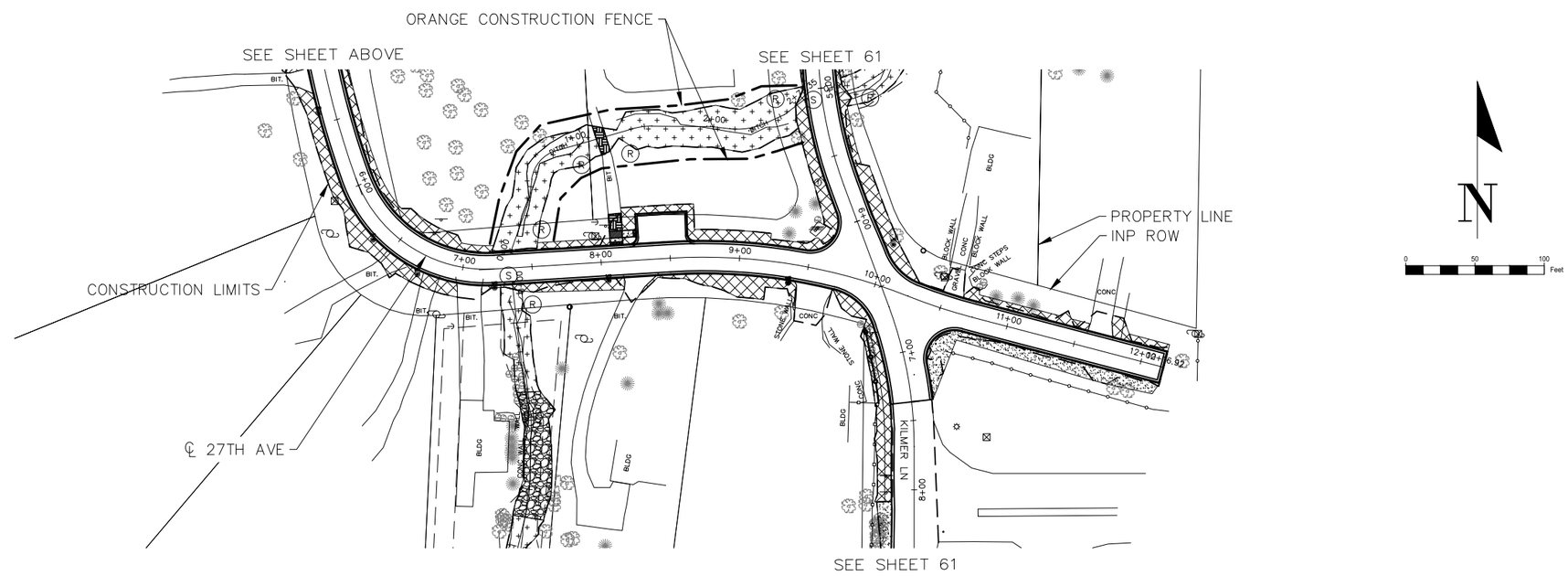

NO	DATE	BY	CKD	APPR	REVISION

I hereby certify that this plan, specification or report was prepared by me or under my direct supervision and that I am a duly Licensed Professional Engineer under the laws of the State of Minnesota.

Signature: MICHAEL J. PAYNE

Date: 3-13-18 License#: 50484

City of Plymouth

PLYMOUTH, MINNESOTA
KILMER PARK STREET RECONSTRUCTION

RESTORATION & EROSION CONTROL

LANCASTER LANE & 27TH AVE

STATE AID PROJECT NO. ----	DRAWN BY M. PAYNE	DATE 2-18	SHEET 60 OF 106
COUNTY PROJECT NO. ----	DESIGNED BY M. PAYNE	2-18	
	CHECKED BY M. PAYNE	2-18	
CITY PROJECT NO. ST189001.001	REVIEWED BY J. RENNEBERG	2-18	

LEGEND

- SOD TYPE LAWN & BOULEVARD
- HYDROSEED: MNDOT MIX 25-151
- SEED: MNDOT MIX 34-261 W/ EROSION CONTROL BLANKET 4N
- RIPRAP
- SILT FENCE
- (R) RIPRAP AT STORM SEWER OUTLET
- (S) SUMP MANHOLE

NOTES:

- CONTRACTOR TO PROVIDE INLET PROTECTION AT ALL CATCH BASINS THAT RECEIVE RUNOFF FROM PROJECT
- CONTRACTOR SHALL PROVIDE AN APPROVED EROSION CONTROL CONSTRUCTION ENTRANCE AT BOTH ENDS OF PROJECT AS DIRECTED BY ENGINEER(INCIDENTAL)
- CONTRACTOR SHALL USE EROSION CONTROL BLANKET IN ADDITION TO HYDROSEED IN DITCH RESTORATION AREAS.
- EXPOSED SOILS IN DITCHES SHALL BE STABILIZED WITHIN 24 HOURS AFTER GRADING IS FINISHED.
- STREETS SHALL BE SWEPT AS DIRECTED BY ENGINEER.

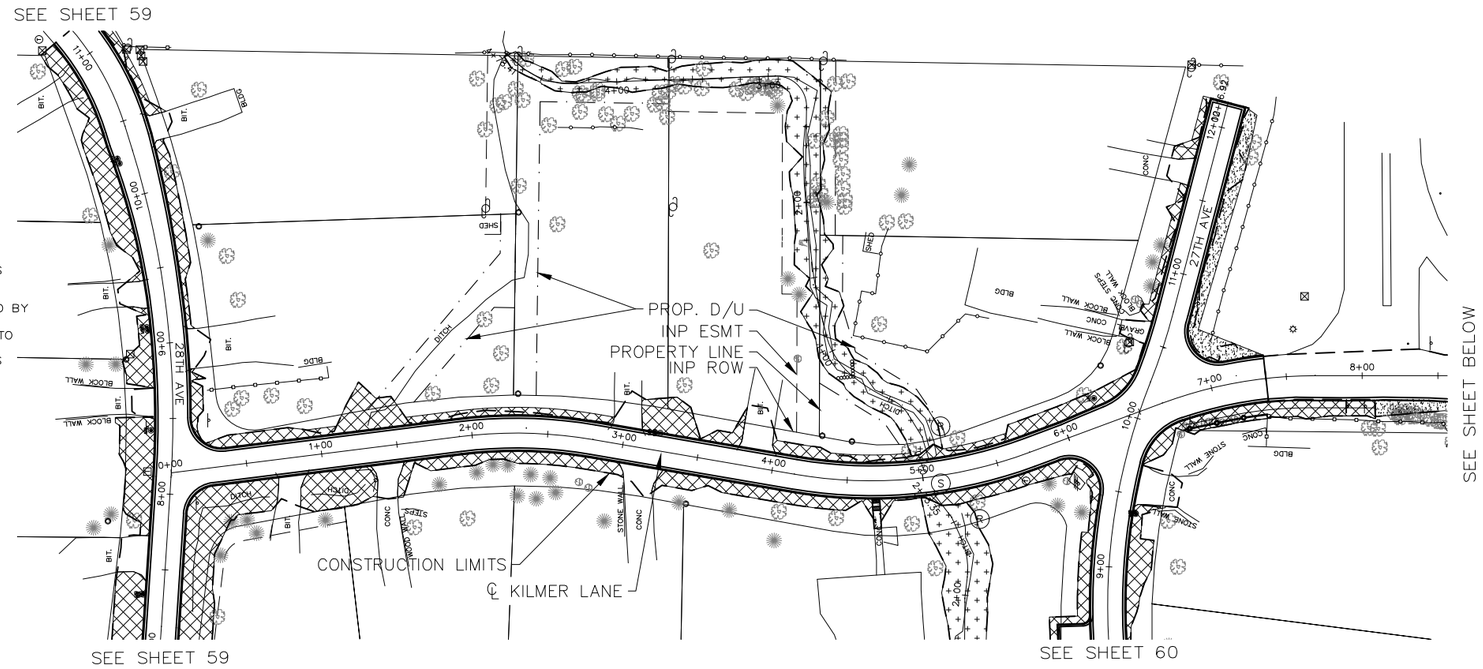

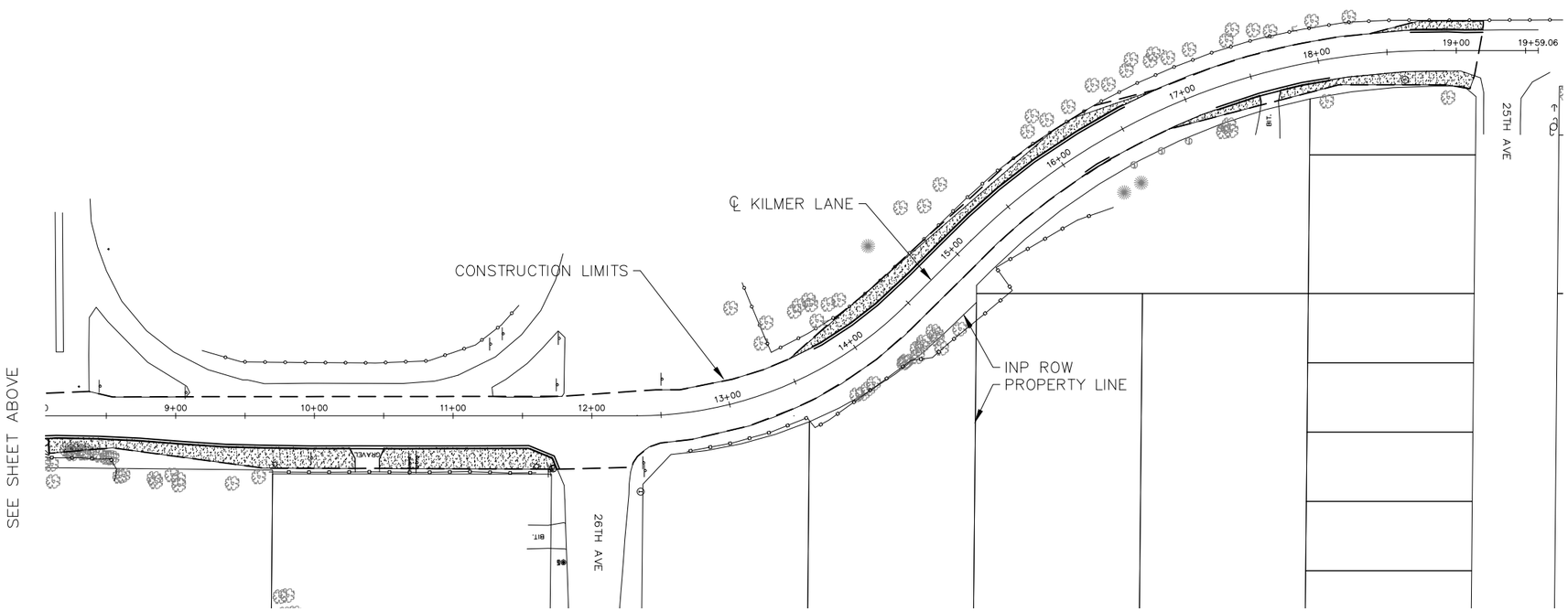

NO	DATE	BY	CKD	APPR	REVISION

I hereby certify that this plan, specification or report was prepared by me or under my direct supervision and that I am a duly Licensed Professional Engineer under the laws of the State of Minnesota.

Signature: MICHAEL J. PAYNE

Date: 3-13-18 License#: 50484

City of Plymouth

PLYMOUTH, MINNESOTA
KILMER PARK STREET RECONSTRUCTION

RESTORATION & EROSION CONTROL

KILMER LANE

STATE AID PROJECT NO. ----	DRAWN BY M. PAYNE	DATE 2-18
COUNTY PROJECT NO. ----	DESIGNED BY M. PAYNE	2-18
CITY PROJECT NO. ST189001.001	CHECKED BY M. PAYNE	2-18
	REVIEWED BY J. RENNEBERG	2-18

LOADING CASE

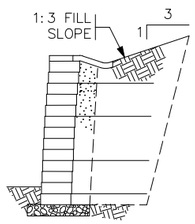

1:3 SLOPED FILL

CASE 4

DESIGN CRITERIA

SEE SPECIAL PROVISIONS

NOTES TO CONTRACTOR:

PROVIDE DETAILED DRAWINGS FOR CONSTRUCTION CONTAINING:

- ELEVATION VIEW WITH REINFORCEMENT PLACEMENT REQUIREMENTS, WALL FACING LAYOUT, AND GEOMETRIC INFORMATION.
- PLAN VIEW WITH BOTTOM AND TOP OF WALL ALIGNMENT, AND PLAN LIMITS OF WALL ALIGNMENT.
- CROSS SECTIONS DETAILING BATTER, REINFORCEMENT, VERTICAL SPACING, REINFORCEMENT LENGTHS, SUBSURFACE DRAINAGE, SURFACE DRAINAGE, AND WATER RUNOFF COLLECTION ABOVE WALL.
- REINFORCEMENT LAYOUT: REINFORCEMENT SHALL BE PLACED AT 100% COVERAGE RATIO. REINFORCEMENT ELEVATIONS SHALL BE CONSISTENT ACROSS LENGTH OF WALL STRUCTURE.
- NOTE BLOCK, REINFORCEMENT, AND FILL PLACEMENT METHODS AND REQUIREMENTS.
- DETAIL ALL WALL FILL PENETRATIONS AND WALL FACE PENETRATIONS. DETAIL REINFORCEMENT AND/OR WALL FACING UNIT PLACEMENT AROUND PENETRATIONS.
- DETAILS THAT ARE SPECIFIC TO VENDOR PRODUCTS AND THEIR INTERACTION WITH OTHER PROJECT COMPONENTS.
- CERTIFICATION BY PROFESSIONAL ENGINEER THAT THE CONSTRUCTION LAYOUT MEETS THE REQUIREMENTS OF PLANS.

WET CAST MODULAR BLOCK UNITS

WET CAST CONCRETE BLOCK UNITS SHALL BE:

- LARGE BLOCK WET CAST CONCRETE MODULAR BLOCK
- SEE SPECIAL PROVISIONS FOR ALLOWABLE MANUFACTURERS
- SEE SPECIAL PROVISIONS FOR FACE TEXTURE AND COLOR REQUIREMENT

DEFINITION OF TERMS
MBW = MODULAR BLOCK WALL
LL = LIVE LOAD
C.I.P. = CAST-IN-PLACE
H = WALL HEIGHT

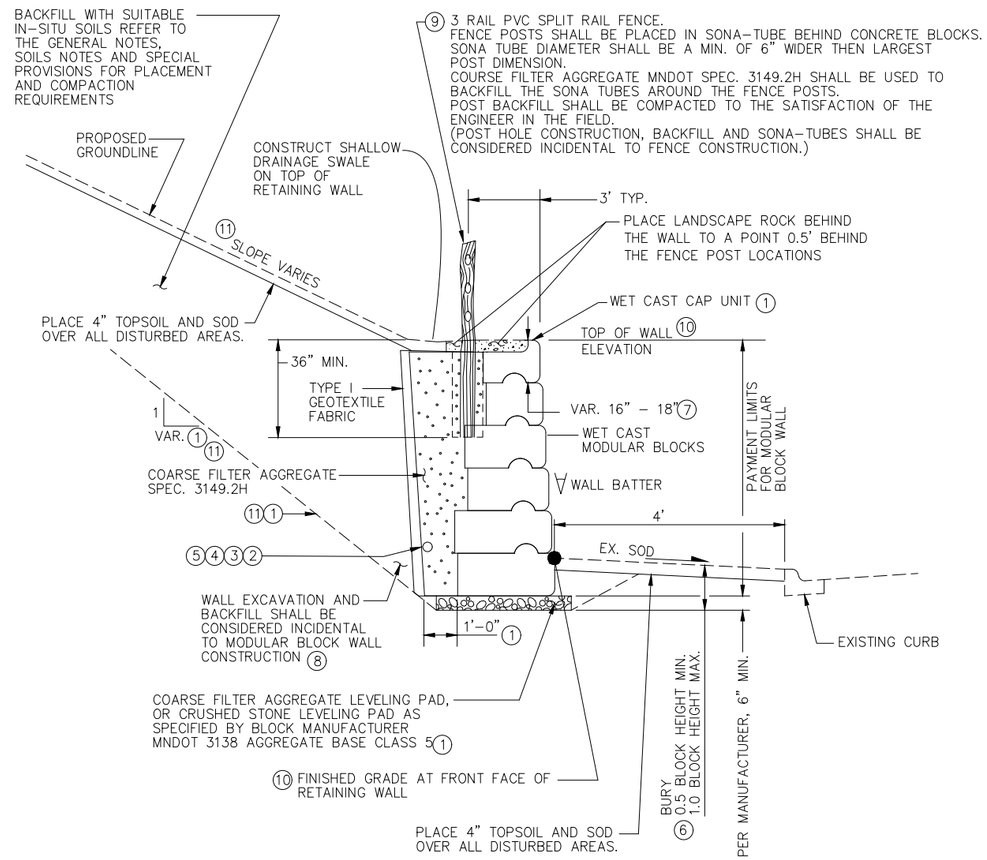

TYPICAL WET CAST MODULAR BLOCK RETAINING WALL DETAIL

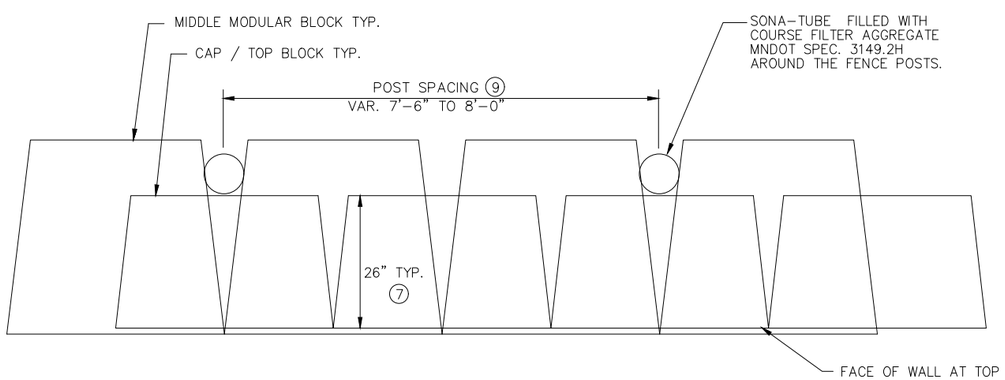

TYPICAL PLAN VIEW FENCE POST LOCATION DETAIL

GENERAL NOTES:

UTILITIES:

EXISTING AND PROPOSED UTILITIES ARE SHOWN IN THE GRADING PLANS. THE CONTRACTOR SHALL VERIFY THE LOCATION OF EXISTING FACILITIES AND SHALL EXERCISE CARE IN ADJACENT CONSTRUCTION.

EXCAVATION AND EARTHWORK:

ALL EXCAVATION AND EMBANKMENT WORK SHALL CONFORM TO Mn/DOT 2451.

CONSTRUCTION:

CONSTRUCTION SHALL BE IN ACCORDANCE WITH Mn/DOT 2411, EXCEPT AS NOTED.

COMPACTION REQUIREMENTS:

COMPACT REINFORCED WALL FILL IN ACCORDANCE WITH Mn/DOT SPEC. 2105.3F2 UNLESS RECOMMENDED OTHERWISE BY THE SOILS ENGINEER.

COMPACT GRANULAR BEDDING IN ACCORDANCE WITH Mn/DOT SPEC. 2105.3F2 UNLESS RECOMMENDED OTHERWISE BY THE SOILS ENGINEER.

NOTES:

1. PER MANUFACTURERS REQUIREMENTS – ALL EXCAVATION, BACKFILL, TOPSOIL, AGGREGATE AND GEOTEXTILE FABRIC SHALL BE INCIDENTAL TO WALL CONSTRUCTION.
2. INSPECT EXCAVATION SLOPES FOR ACTIVE SEEPAGE AND PLACE ADDITIONAL DRAINS WHERE SEEPAGE OCCURS AS DIRECTED BY THE ENGINEER.
3. PLACE DRAIN AT BOTTOM OF REINFORCED SOIL IF PIPE CAN BE SLOPED TO OUTLET. DO NOT OUTLET ONTO SIDEWALK. (INC.)
4. 4" PERFORATED PE PIPE, Mn/DOT SPEC. 3278, WRAP WITH TYPE I GEOTEXTILE, Mn/DOT SPEC. 3733 (TYP.) INSTALLATION AS PER Mn/DOT SPEC. 2502. (INCIDENTAL TO WALL)
5. REFER TO PLAN & ELEVATION DRAWINGS FOR OUTLET LOCATIONS.
6. UNLESS DEEPER BURY IS REQUIRED BY WALL MANUFACTURER'S PROFESSIONAL ENGINEER AND APPROVAL IS REQUESTED OF THE PROJECT ENGINEER AND APPROVAL IS SPECIFICALLY GIVEN.
7. DEPENDING ON BLOCK MANUFACTURER
8. THE CONTRACTOR SHALL HAVE THE OPTION TO USE SOILS OTHER THAN IN-SITU SOILS FOR BACKFILL BEHIND THE WALLS, IF OTHER MATERIALS ARE USED IT SHALL MEET MNDOT SPEC 3149.2B2 AND SHALL BE CONSIDERED INCIDENTAL TO THE MODULAR BLOCK RETAINING WALL.
9. FENCE IS NECESSARY ON WALLS OVER 30" IN HEIGHT. FINAL FENCE LOCATION TO BE VERIFIED IN THE FIELD BY THE ENGINEER.
10. SEE PROFILE FOR WALL ELEVATIONS.
11. TEMPORARY SHORING MAYBE REQUIRED TO PROTECT EXISTING TREES FROM STRUCTURE EXCAVATION. SEE CONSTRUCTION PLANS FOR TREE LOCATIONS THAT NEED PROTECTING. TEMPORARY SHORING OR ANY OTHER MEASURES USED TO PROTECT TREES DURING CONSTRUCTION SHALL BE CONSIDERED INCIDENTAL TO WALL CONSTRUCTION.

4"X4" (NOMINAL) 3 RAIL WHITE PLASTIC VINYL SPLIT RAIL FENCE. MATERIALS AND INSTALLATION TO BE APPROVED BY THE ENGINEER.

SPLIT RAIL FENCE

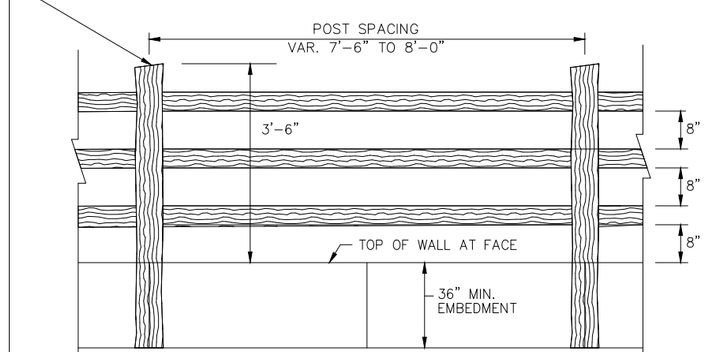

NO	DATE	BY	CKD	APPR	REVISION

I hereby certify that this plan, specification or report was prepared by me or under my direct supervision and that I am a duly Licensed Professional Engineer under the laws of the State of Minnesota.

Signature: MICHAEL J. PAYNE

Date: 3-13-18 License#: 50484

City of Plymouth

PLYMOUTH, MINNESOTA
KILMER PARK STREET RECONSTRUCTION

RETAINING WALLS
KILMER WALL DETAIL

STATE AID PROJECT NO.	DRAWN BY	DATE
----	M. PAYNE	2-18
COUNTY PROJECT NO. ----	DESIGNED BY M. PAYNE	2-18
CITY PROJECT NO. ST189001.001	CHECKED BY M. PAYNE	2-18
	REVIEWED BY J. RENNEBERG	2-18

NOTES:
1. NATHAN LANE WALLS SHALL BE CONSTRUCTED WITH SMALL MODULAR BLOCK.
2. ONLY TREES MARKED FOR REMOVAL SHALL BE REMOVED.
3. EXISTING RETAINING WALLS SHALL BE REMOVED

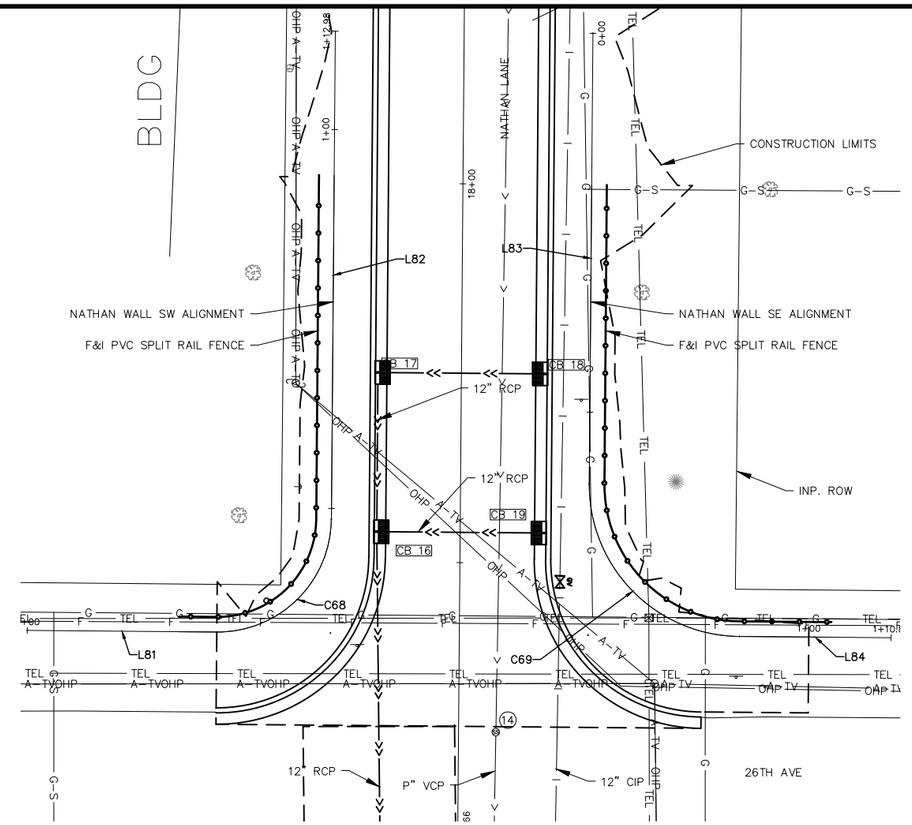

N

0 10 20 Feet

Nathan Wall SW PROFILE

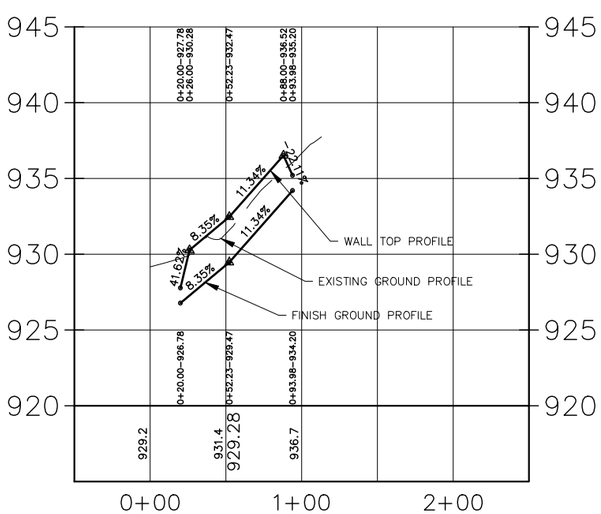

Nathan Wall SE PROFILE

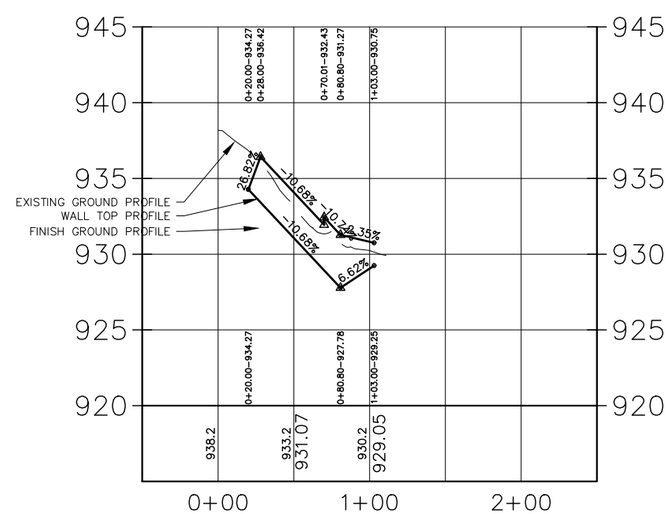

NATHAN WALL SW										
SEGMENT NUMBER	BEGIN STATION	DELTA	DEGREE	RADIUS	TANGENT	LENGTH	X	Y	AZIMUTH	END STATION
L81	0+00.00					24.998	494150.4552	178927.0803	90° 29' 10.24"	0+25.00
C68	0+25.00	90°01'30.33"	381°58'18.71"	15.00	15.007	23.569	494175.4521	178926.8682	90° 29' 10.24" 0° 27' 39.91"	0+48.57
L82	0+48.57					64.418	494190.5789	178941.7470	0° 27' 39.91"	1+12.98

NATHAN WALL SE										
SEGMENT NUMBER	BEGIN STATION	DELTA	DEGREE	RADIUS	TANGENT	LENGTH	X	Y	AZIMUTH	END STATION
L83	0+00.00					59.449	494225.0962	179005.8896	180° 27' 39.91"	0+59.45
C69	0+59.45	89°58'29.67"	286°28'44.03"	20.00	19.991	31.407	494224.6178	178946.4430	180° 27' 39.91" 90° 29' 10.24"	0+90.86
L84	0+90.86					20.004	494244.4474	178926.2827	90° 29' 10.24"	1+10.86

NO	DATE	BY	CKD	APPR	REVISION

I hereby certify that this plan, specification or report was prepared by me or under my direct supervision and that I am a duly Licensed Professional Engineer under the laws of the State of Minnesota.

Signature: MICHAEL J. PAYNE

Date: 3–13–18 License#: 50484

City of Plymouth

PLYMOUTH, MINNESOTA
KILMER PARK STREET RECONSTRUCTION

RETAINING WALLS

NATHAN LANE

STATE AID PROJECT NO.	DRAWN BY	DATE
----	M. PAYNE	2–18
COUNTY PROJECT NO.	DESIGNED BY	
----	M. PAYNE	2–18
CITY PROJECT NO.	CHECKED BY	
ST189001.001	M. PAYNE	2–18
	REVIEWED BY	
	J. RENNEBERG	2–18

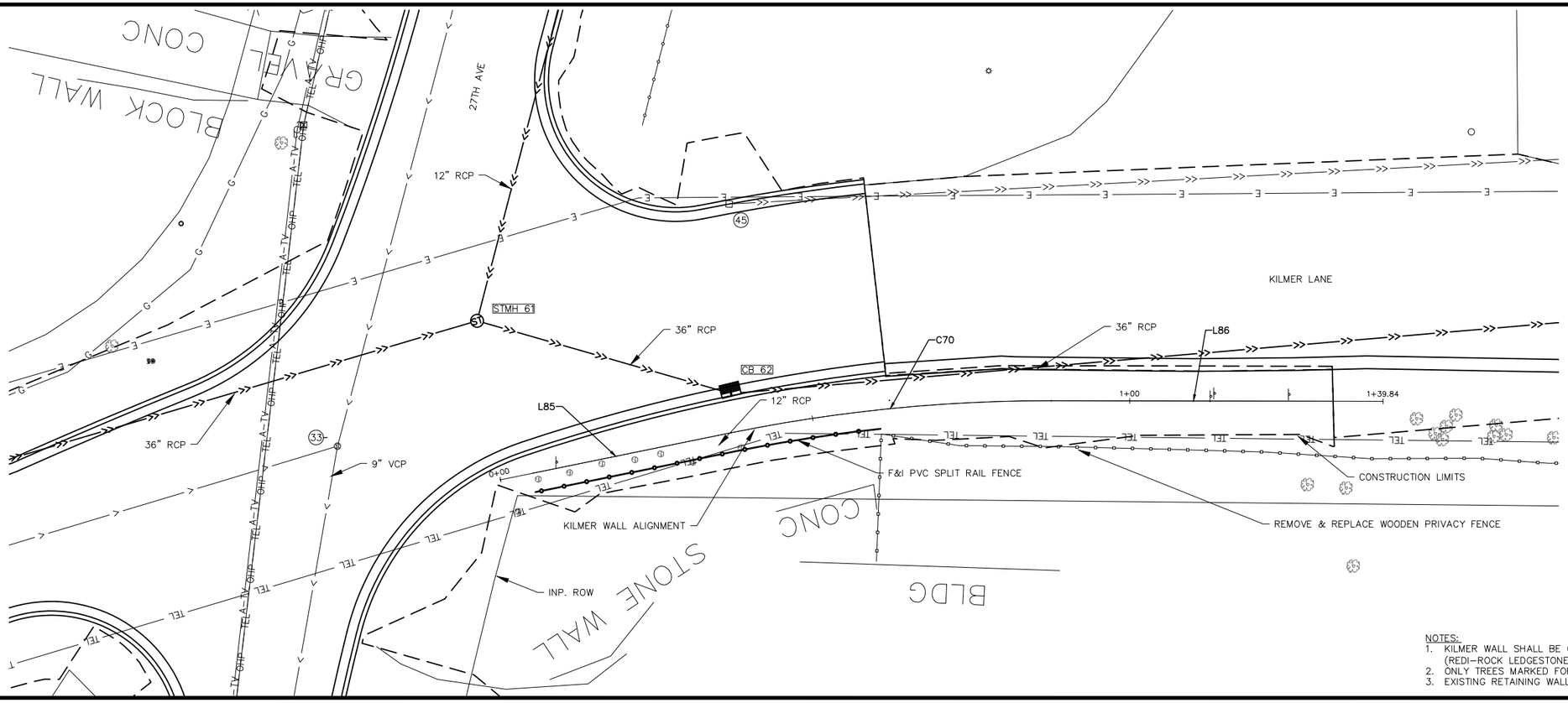

NOTES:
1. KILMER WALL SHALL BE CONSTRUCTED FROM LARGE MODULAR BLOCK (REDI-ROCK LEDGESTONE FACE OR APPROVED EQUAL).
2. ONLY TREES MARKED FOR REMOVAL SHALL BE REMOVED.
3. EXISTING RETAINING WALLS SHALL BE REMOVED

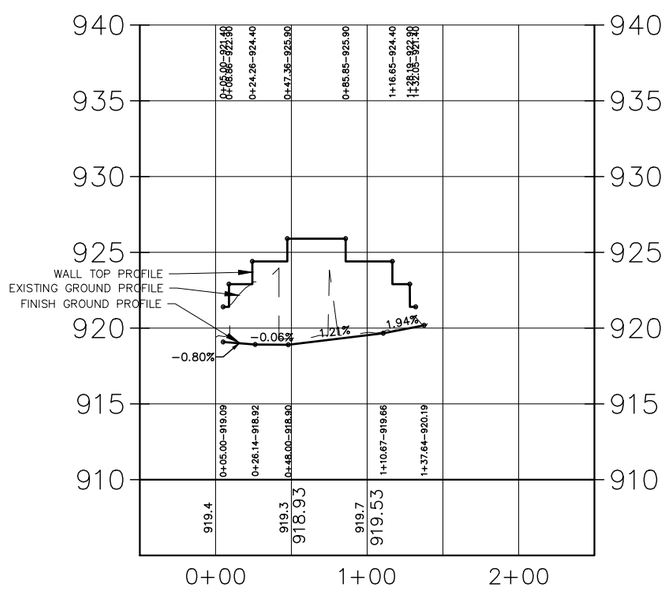

KILMER WALL										
SEGMENT NUMBER	BEGIN STATION	DELTA	DEGREE	RADIUS	TANGENT	LENGTH	X	Y	AZIMUTH	END STATION
L85	0+00.00					36.989	495066.1624	179418.2221	168° 28' 24.29"	0+36.99
C70	0+36.99	11°37'02.57"	22°55'05.92"	250.00	25.432	50.690	495073.5536	179381.9791	168° 28' 24.29" 180° 05' 26.87"	0+87.68
L86	0+87.68					52.157	495078.5953	179331.6273	180° 05' 26.87"	1+39.84

NO	DATE	BY	CKD	APPR	REVISION

I hereby certify that this plan, specification or report was prepared by me or under my direct supervision and that I am a duly Licensed Professional Engineer under the laws of the State of Minnesota.

Signature: MICHAEL J. PAYNE

Date: 3-13-18 License#: 50484

City of Plymouth

PLYMOUTH, MINNESOTA
KILMER PARK STREET RECONSTRUCTION

RETAINING WALLS

KILMER LANE

STATE AID PROJECT NO.	DRAWN BY	DATE
----	M. PAYNE	2-18
COUNTY PROJECT NO.	DESIGNED BY M. PAYNE	2-18
----	CHECKED BY M. PAYNE	2-18
CITY PROJECT NO. ST189001.001	REVIEWED BY J. RENNEBERG	2-18

0+50.00

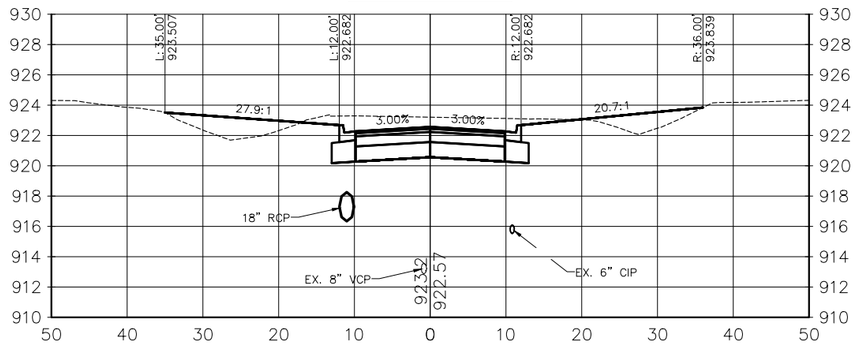

1+50.00

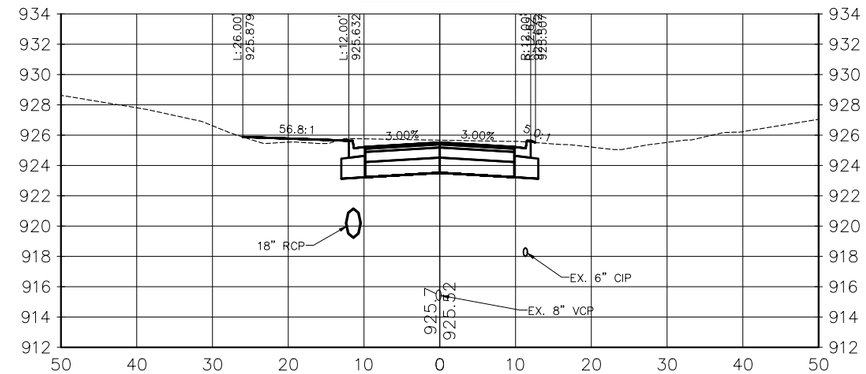

1+00.00

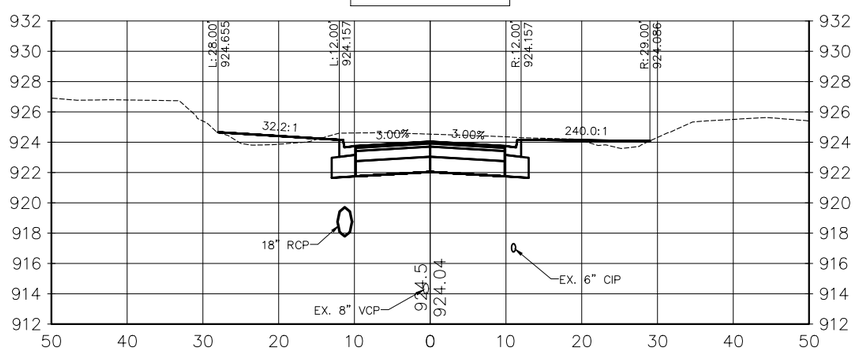

2+00.00

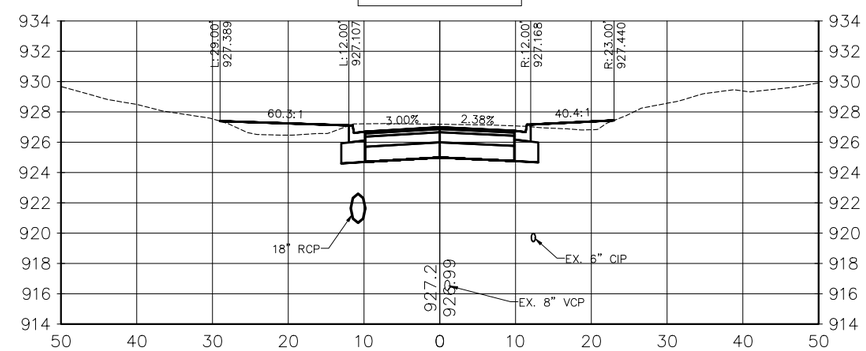

1+25.00

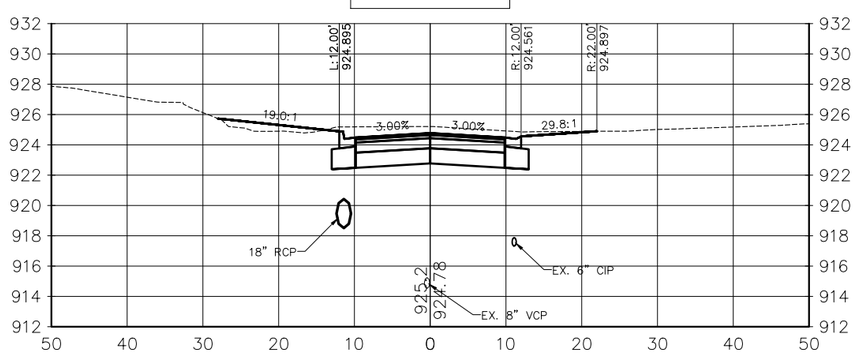

2+40.00

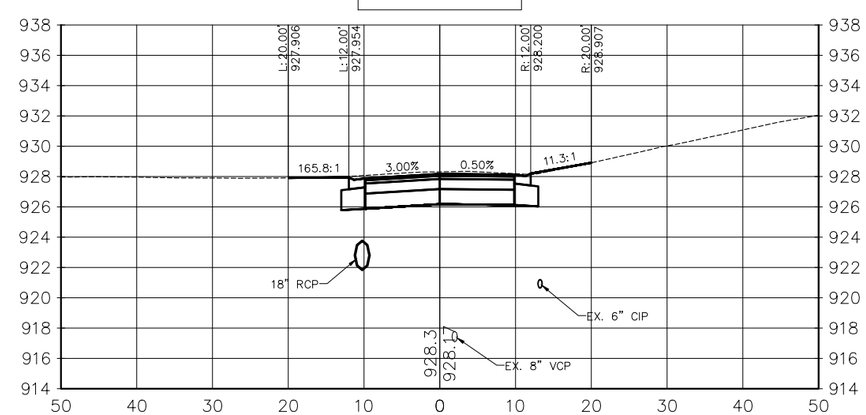

NO	DATE	BY	CKD	APPR	REVISION

I hereby certify that this plan, specification or report was prepared by me or under my direct supervision and that I am a duly Licensed Professional Engineer under the laws of the State of Minnesota.

Signature: MICHAEL J. PAYNE

Date: 3–13–18 License#: 50484

City of Plymouth

PLYMOUTH, MINNESOTA
KILMER PARK STREET
RECONSTRUCTION

CROSS SECTIONS
PILGRIM LANE

STATE AID PROJECT NO.	DRAWN BY	DATE
----	M. PAYNE	2–18
COUNTY PROJECT NO.	DESIGNED BY	
----	M. PAYNE	2–18
CITY PROJECT NO.	CHECKED BY	
ST189001.001	M. PAYNE	2–18
	REVIEWED BY	
	J. RENNEBERG	2–18

2+50.00

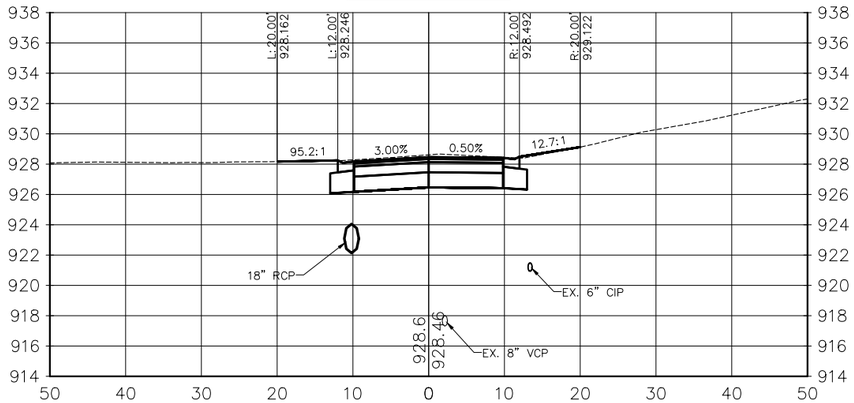

3+00.00

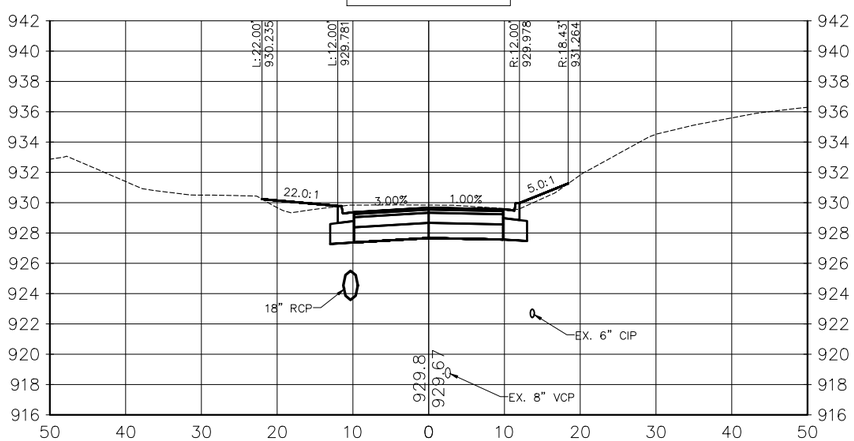

3+50.00

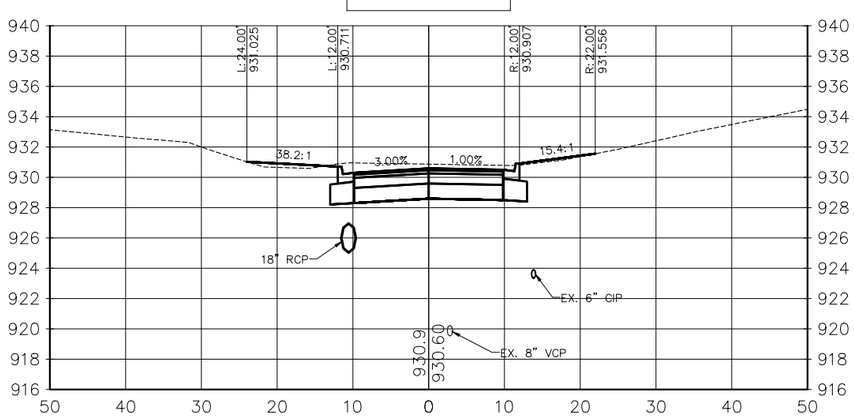

4+00.00

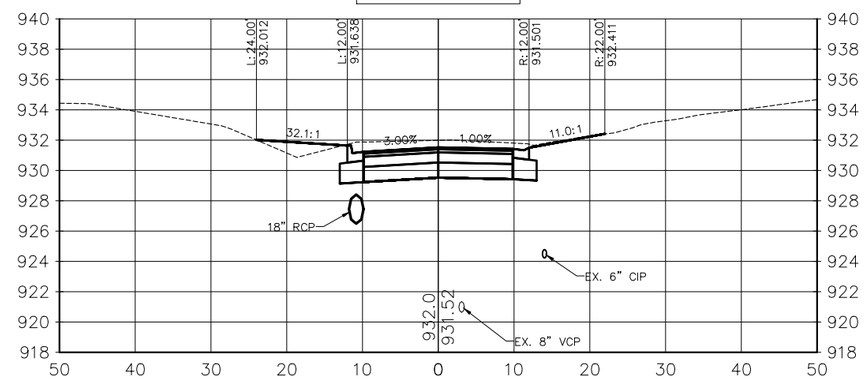

4+50.00

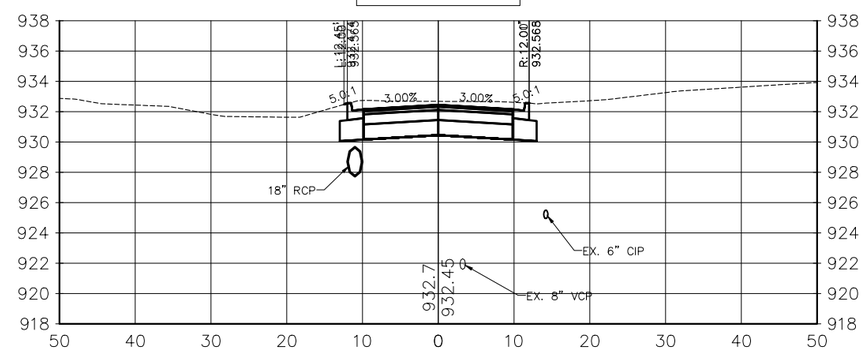

5+00.00

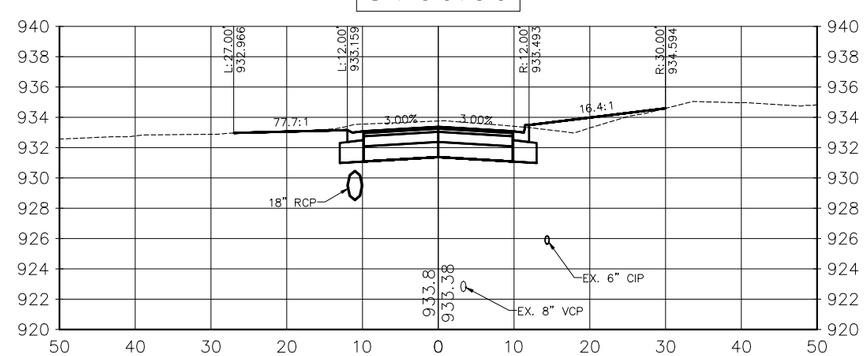

NO	DATE	BY	CKD	APPR	REVISION

I hereby certify that this plan, specification or report was prepared by me or under my direct supervision and that I am a duly Licensed Professional Engineer under the laws of the State of Minnesota.

Signature: MICHAEL J. PAYNE

Date: 3–13–18 License#: 50484

City of Plymouth

PLYMOUTH, MINNESOTA
KILMER PARK STREET RECONSTRUCTION

CROSS SECTIONS
PILGRIM LANE

STATE AID PROJECT NO.	DRAWN BY	DATE
----	M. PAYNE	2–18
COUNTY PROJECT NO.	DESIGNED BY	
----	M. PAYNE	2–18
CITY PROJECT NO.	CHECKED BY	
ST189001.001	M. PAYNE	2–18
	REVIEWED BY	
	J. RENNEBERG	2–18

5+05.00

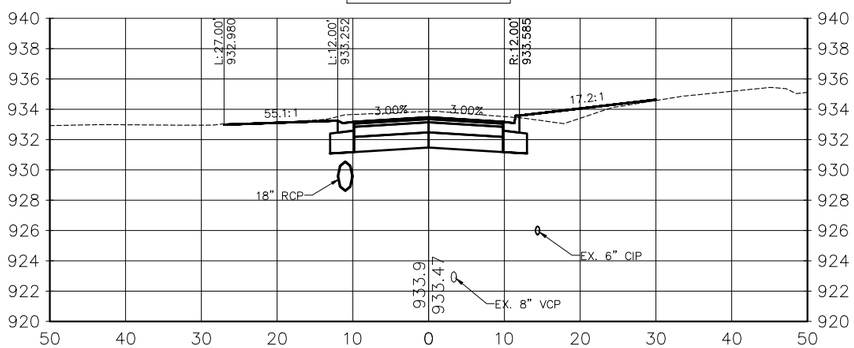

6+00.00

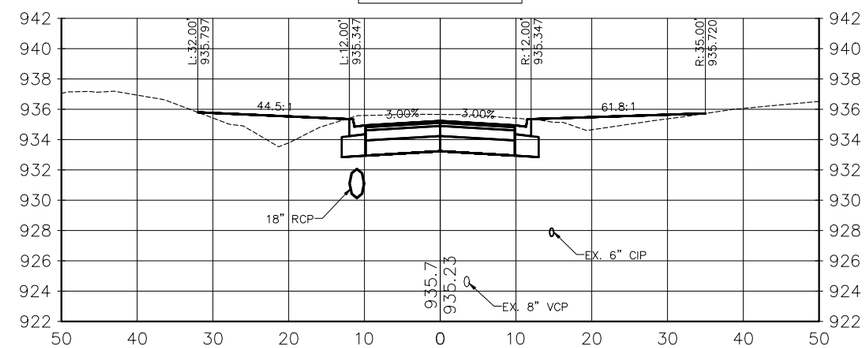

5+50.00

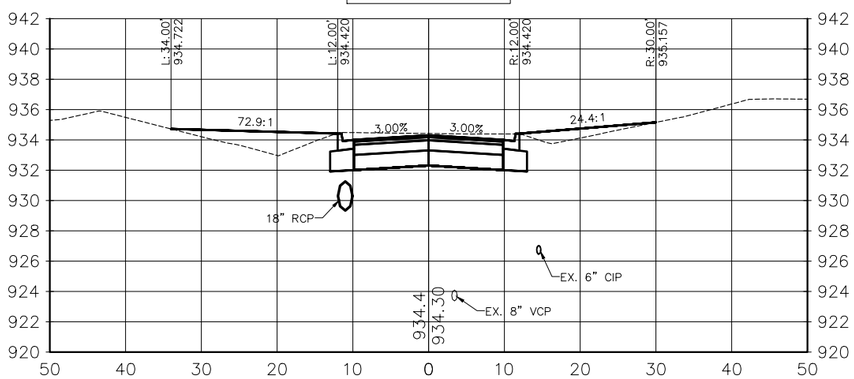

6+15.00

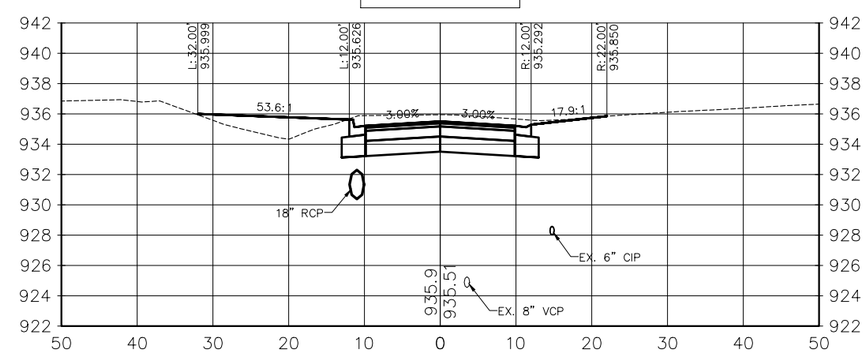

5+80.00

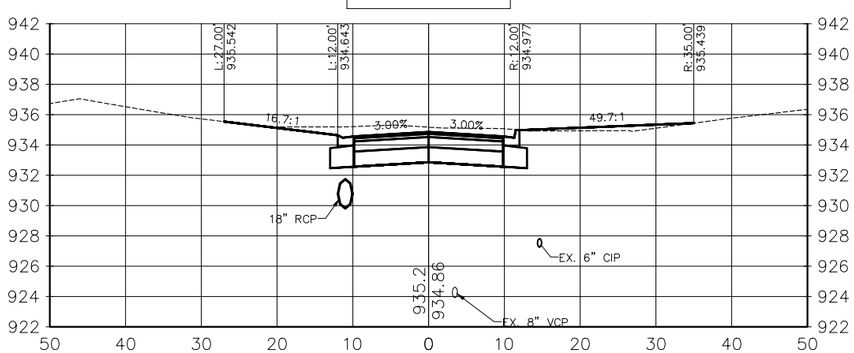

6+50.00

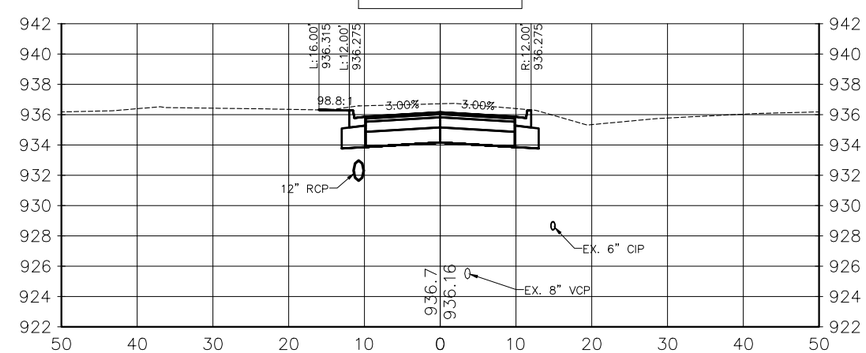

NO	DATE	BY	CKD	APPR	REVISION

I hereby certify that this plan, specification or report was prepared by me or under my direct supervision and that I am a duly Licensed Professional Engineer under the laws of the State of Minnesota.

Signature: MICHAEL J. PAYNE

Date: 3-13-18 License#: 50484

City of Plymouth

PLYMOUTH, MINNESOTA
KILMER PARK STREET
RECONSTRUCTION

CROSS SECTIONS
PILGRIM LANE

STATE AID PROJECT NO.	DRAWN BY	DATE
----	M. PAYNE	2-18
COUNTY PROJECT NO.	DESIGNED BY	
----	M. PAYNE	2-18
CITY PROJECT NO.	CHECKED BY	
ST189001.001	M. PAYNE	2-18
	REVIEWED BY	
	J. RENNEBERG	2-18

7+00.00

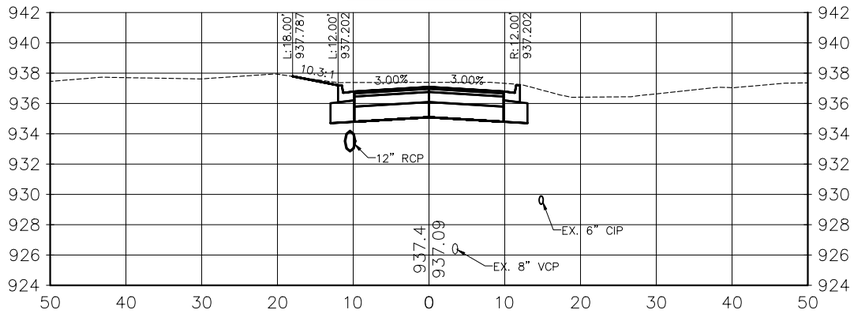

8+00.00

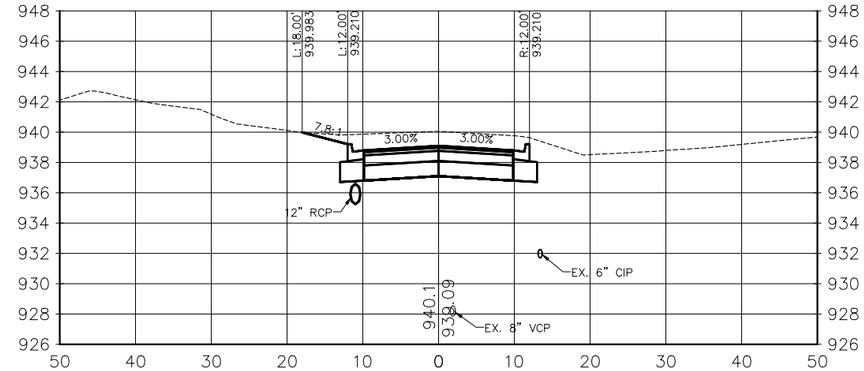

7+50.00

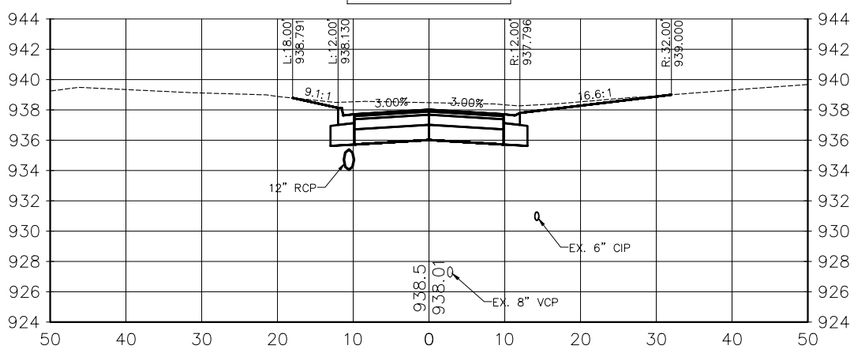

8+50.00

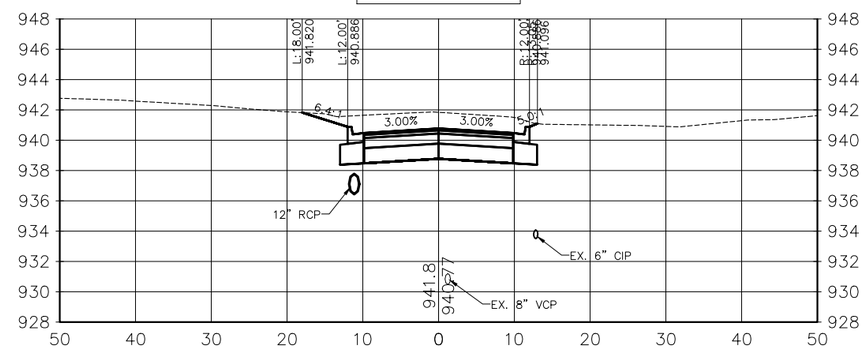

7+60.00

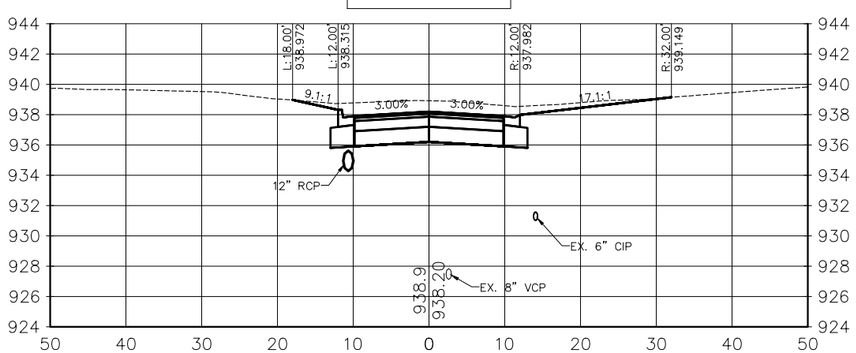

8+60.00

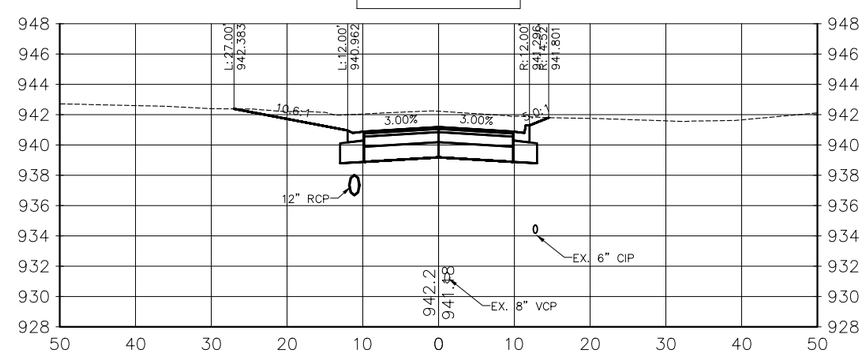

NO	DATE	BY	CKD	APPR	REVISION

I hereby certify that this plan, specification or report was prepared by me or under my direct supervision and that I am a duly Licensed Professional Engineer under the laws of the State of Minnesota.

Signature: MICHAEL J. PAYNE

Date: 3–13–18 License#: 50484

City of Plymouth

PLYMOUTH, MINNESOTA
KILMER PARK STREET
RECONSTRUCTION

CROSS SECTIONS
PILGRIM LANE

STATE AID PROJECT NO.	DRAWN BY	DATE
----	M. PAYNE	2–18
COUNTY PROJECT NO.	DESIGNED BY	
----	M. PAYNE	2–18
	CHECKED BY	
	M. PAYNE	2–18
CITY PROJECT NO.	REVIEWED BY	
ST189001.001	J. RENNEBERG	2–18

7+00.00

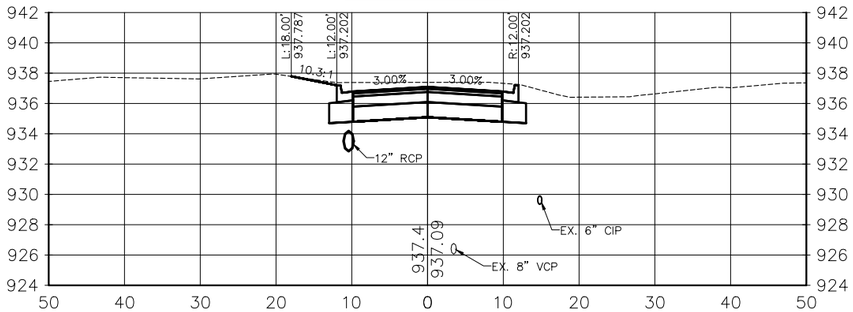

8+00.00

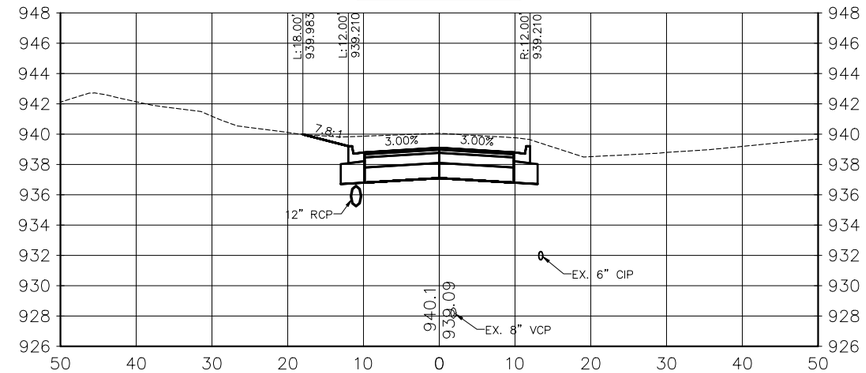

7+50.00

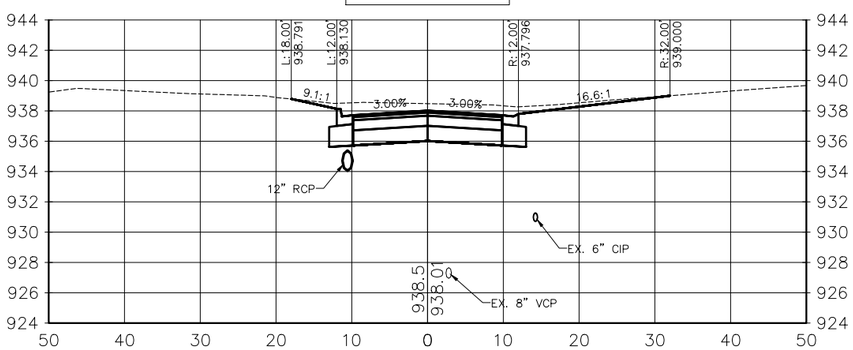

8+50.00

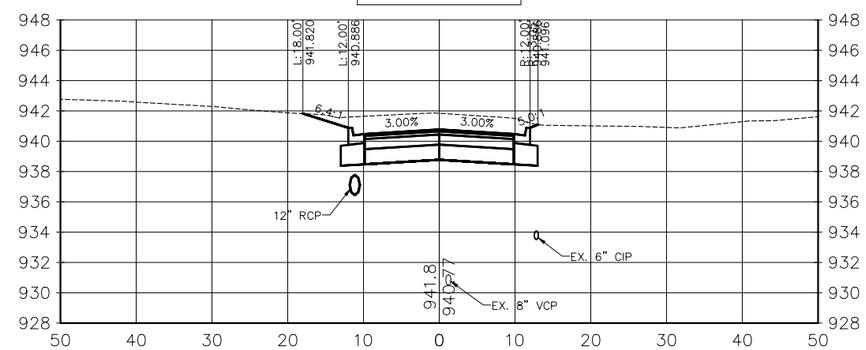

7+60.00

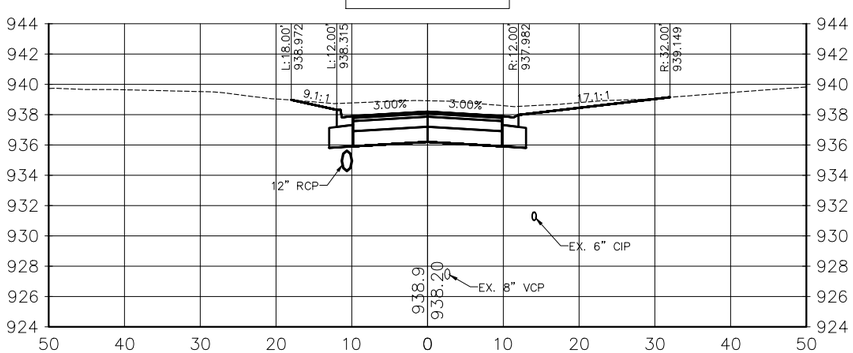

8+60.00

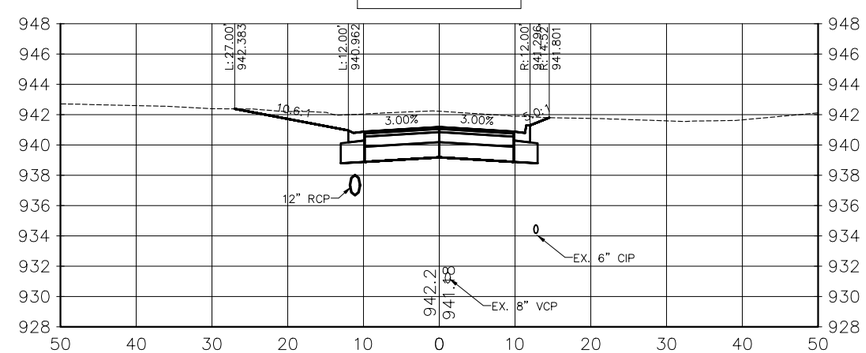

NO	DATE	BY	CKD	APPR	REVISION

I hereby certify that this plan, specification or report was prepared by me or under my direct supervision and that I am a duly Licensed Professional Engineer under the laws of the State of Minnesota.

Signature: MICHAEL J. PAYNE

Date: 3–13–18 License#: 50484

City of Plymouth

PLYMOUTH, MINNESOTA
KILMER PARK STREET
RECONSTRUCTION

CROSS SECTIONS
PILGRIM LANE

STATE AID PROJECT NO.	DRAWN BY	DATE
----	M. PAYNE	2–18
COUNTY PROJECT NO.	DESIGNED BY	
----	M. PAYNE	2–18
	CHECKED BY	
CITY PROJECT NO.	M. PAYNE	2–18
ST189001.001	REVIEWED BY	
	J. RENNEBERG	2–18

8+65.00

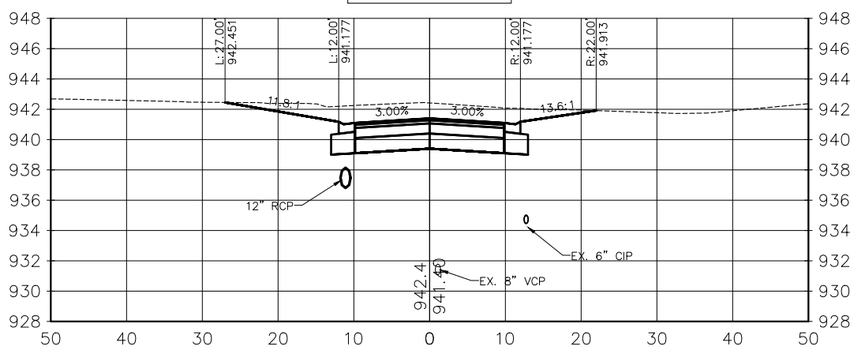

9+50.00

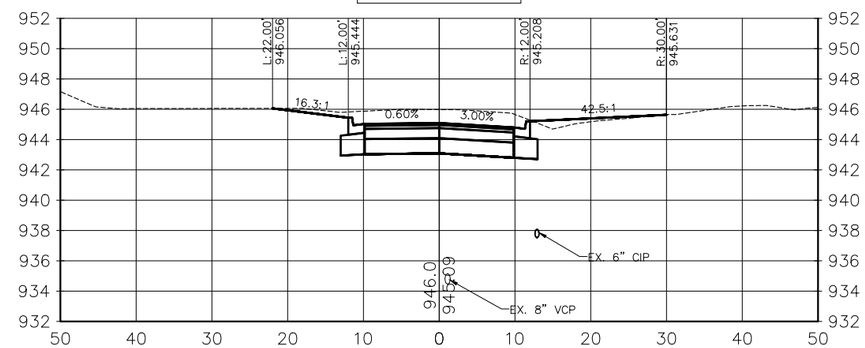

9+00.00

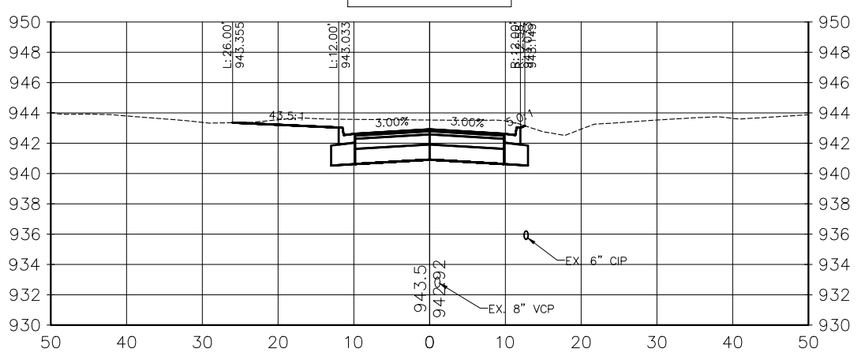

10+00.00

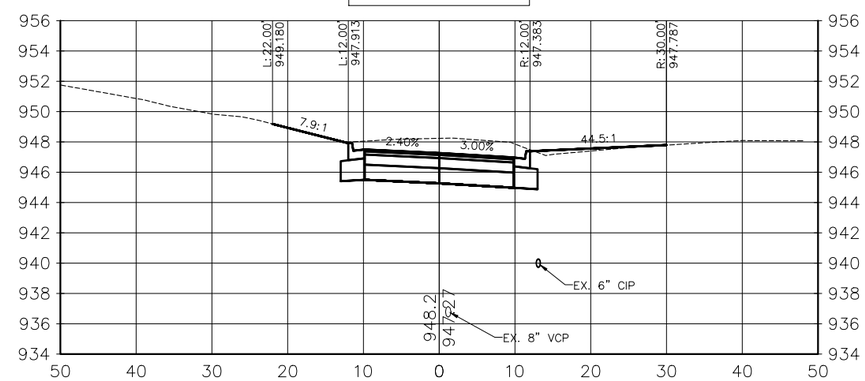

9+15.00

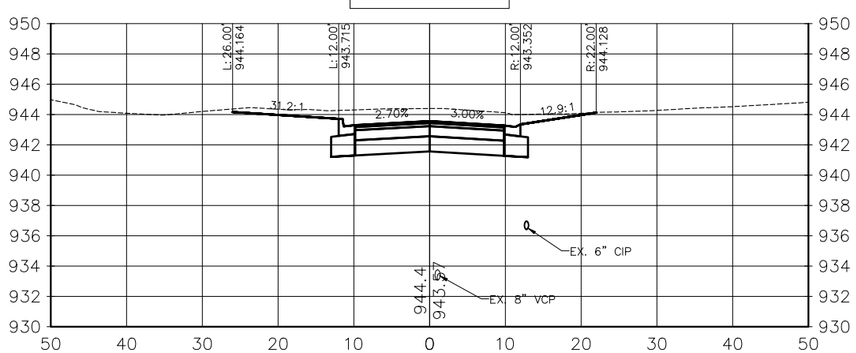

10+40.00

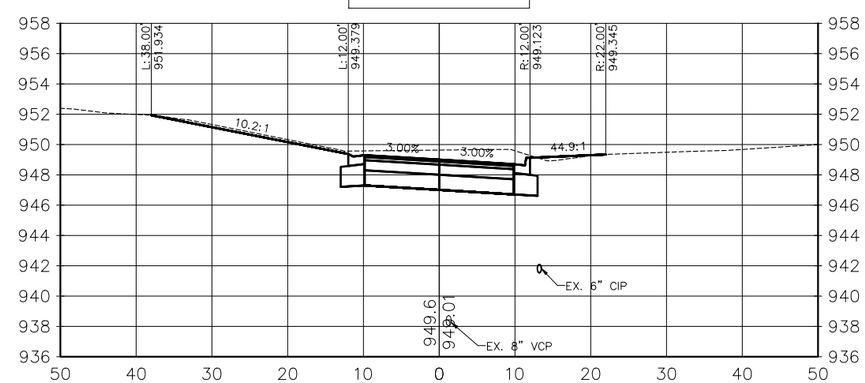

NO	DATE	BY	CKD	APPR	REVISION

I hereby certify that this plan, specification or report was prepared by me or under my direct supervision and that I am a duly Licensed Professional Engineer under the laws of the State of Minnesota.

Signature: MICHAEL J. PAYNE

Date: 3-13-18 License#: 50484

City of Plymouth

PLYMOUTH, MINNESOTA
KILMER PARK STREET
RECONSTRUCTION

CROSS SECTIONS
PILGRIM LANE

STATE AID PROJECT NO.	DRAWN BY	DATE
----	M. PAYNE	2-18
COUNTY PROJECT NO.	DESIGNED BY	
----	M. PAYNE	2-18
CITY PROJECT NO.	CHECKED BY	
ST189001.001	M. PAYNE	2-18
	REVIEWED BY	
	J. RENNEBERG	2-18

10+50.00

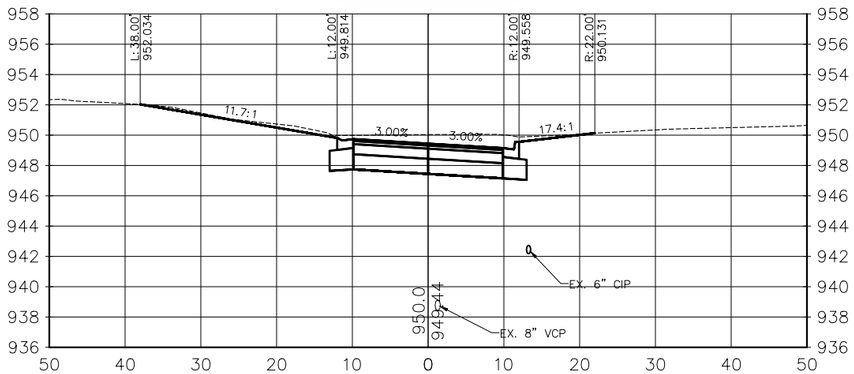

11+15.00

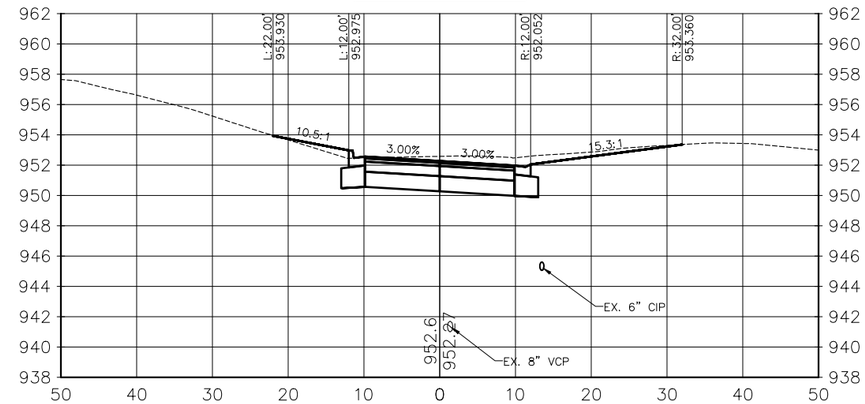

10+65.00

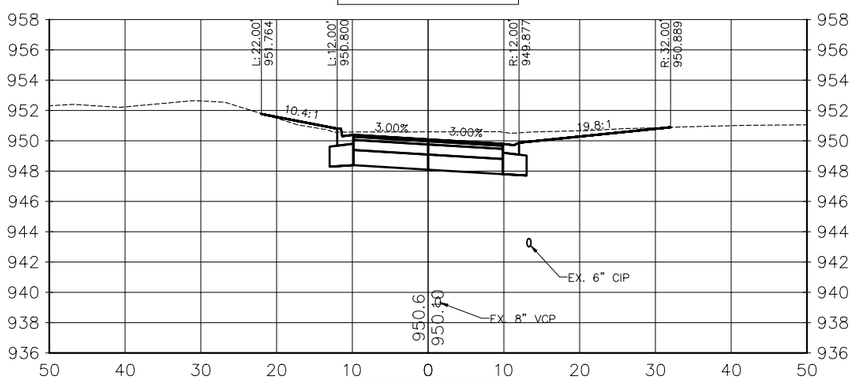

11+50.00

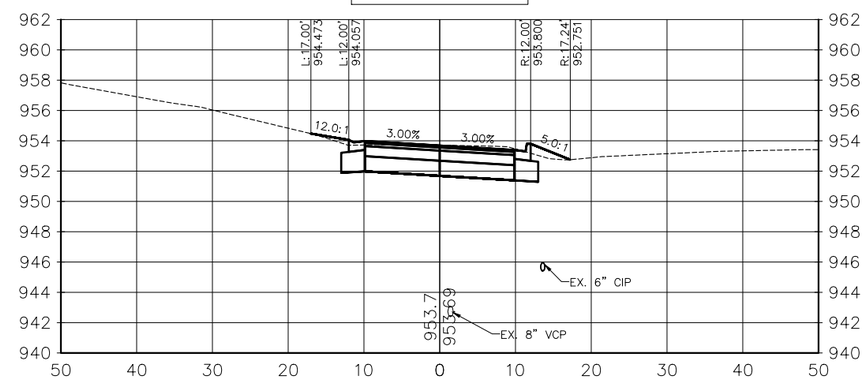

11+00.00

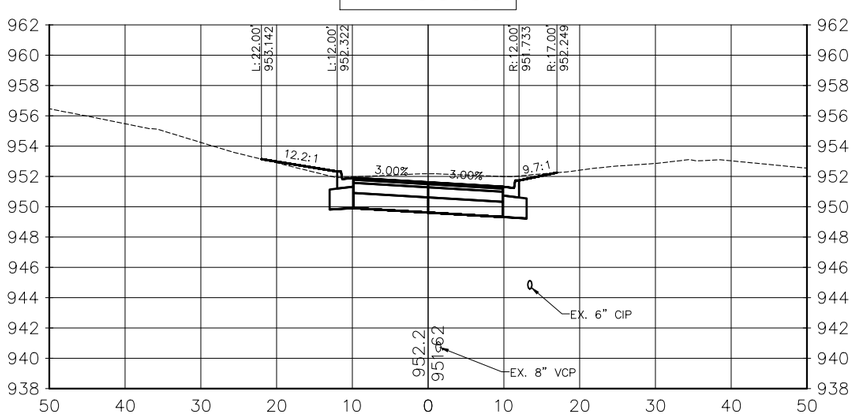

12+00.00

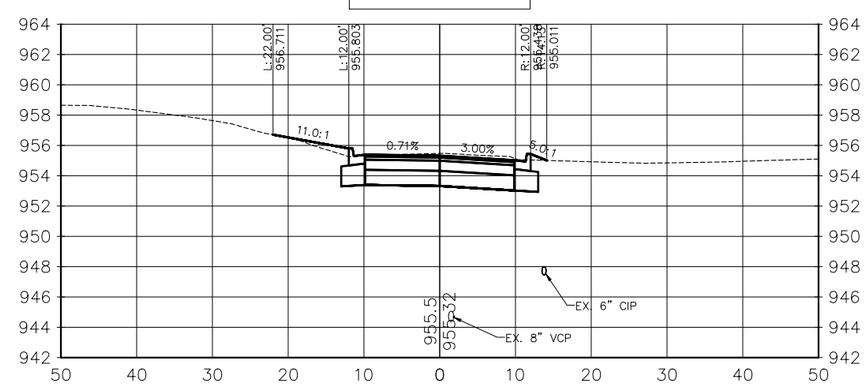

NO	DATE	BY	CKD	APPR	REVISION

I hereby certify that this plan, specification or report was prepared by me or under my direct supervision and that I am a duly Licensed Professional Engineer under the laws of the State of Minnesota.

Signature: MICHAEL J. PAYNE

Date: 3–13–18 License#: 50484

City of Plymouth

PLYMOUTH, MINNESOTA
KILMER PARK STREET RECONSTRUCTION

CROSS SECTIONS
PILGRIM LANE

STATE AID PROJECT NO. ----	DRAWN BY M. PAYNE	DATE 2–18
COUNTY PROJECT NO. ----	DESIGNED BY M. PAYNE	2–18
CITY PROJECT NO. ST189001.001	CHECKED BY M. PAYNE	2–18
	REVIEWED BY J. RENNEBERG	2–18

12+10.00

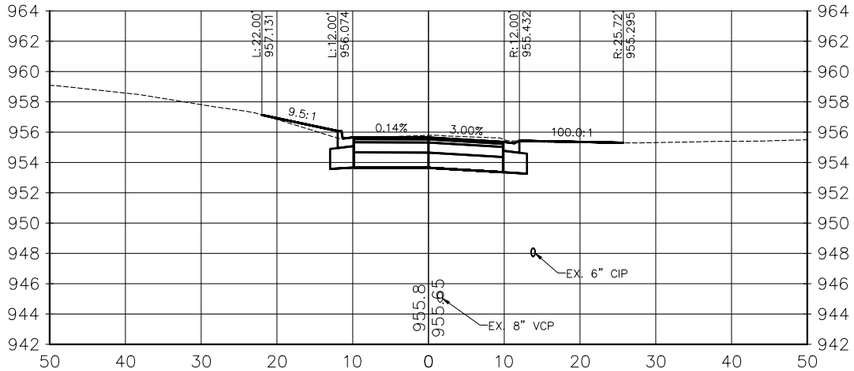

12+50.00

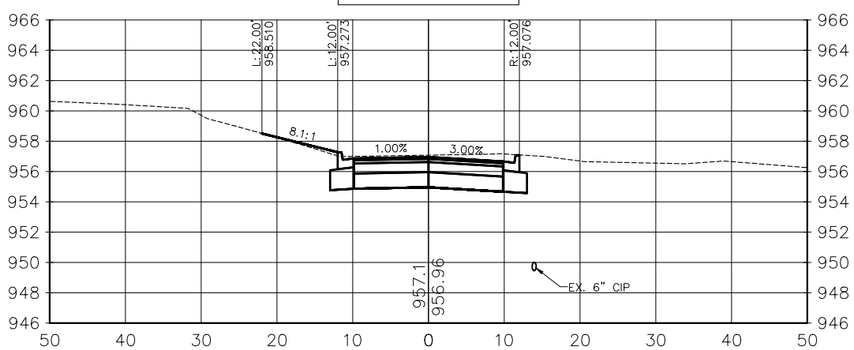

NO	DATE	BY	CKD	APPR	REVISION

I hereby certify that this plan, specification or report was prepared by me or under my direct supervision and that I am a duly Licensed Professional Engineer under the laws of the State of Minnesota.

Signature: MICHAEL J. PAYNE

Date: 3-13-18 License#: 50484

City of Plymouth

PLYMOUTH, MINNESOTA
KILMER PARK STREET
RECONSTRUCTION

CROSS SECTIONS

PILGRIM LANE

STATE AID PROJECT NO.	DRAWN BY	DATE
----	M. PAYNE	2-18
COUNTY PROJECT NO.	DESIGNED BY	
----	M. PAYNE	2-18
	CHECKED BY	
	M. PAYNE	2-18
CITY PROJECT NO.	REVIEWED BY	
ST189001.001	J. RENNEBERG	2-18

1+00.00

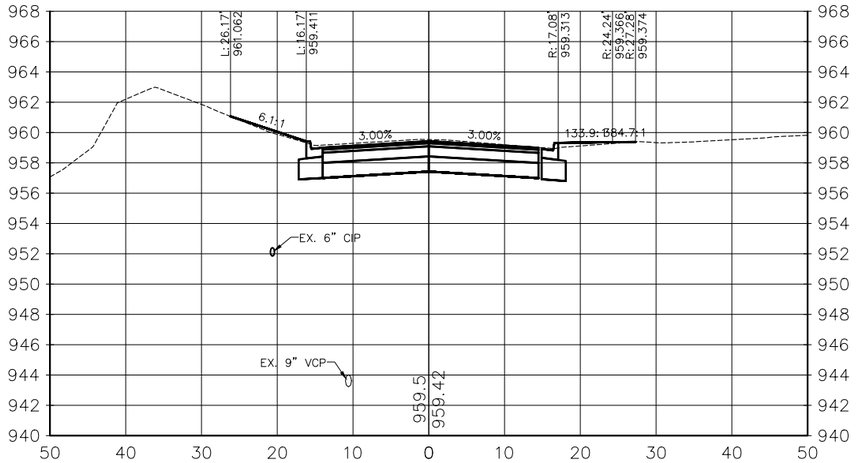

1+85.00

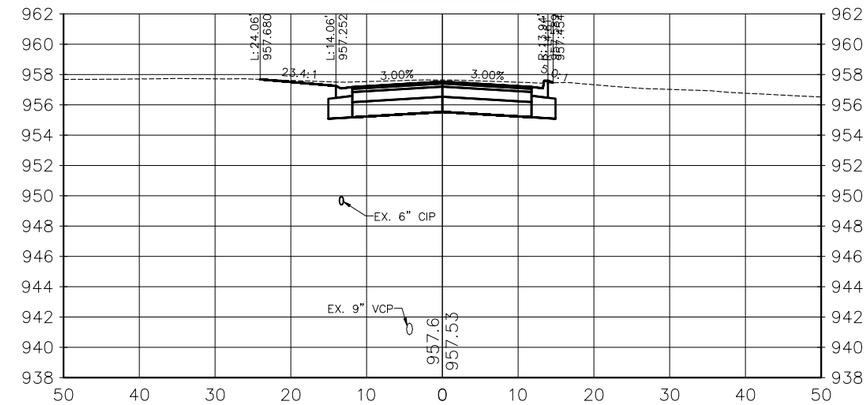

1+50.00

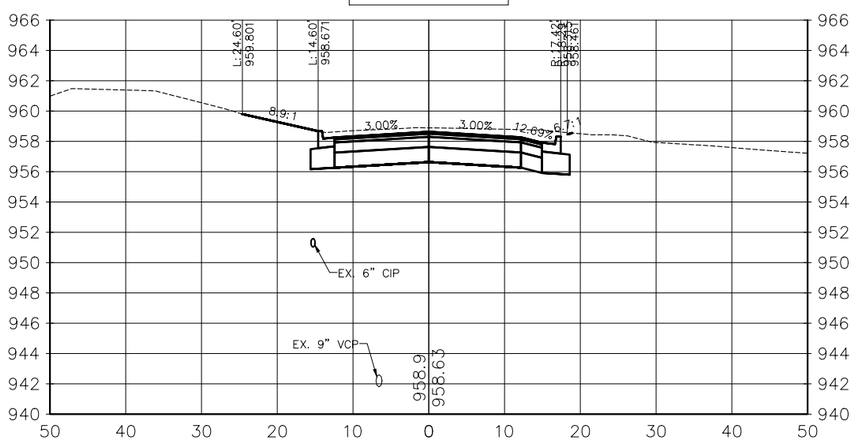

2+00.00

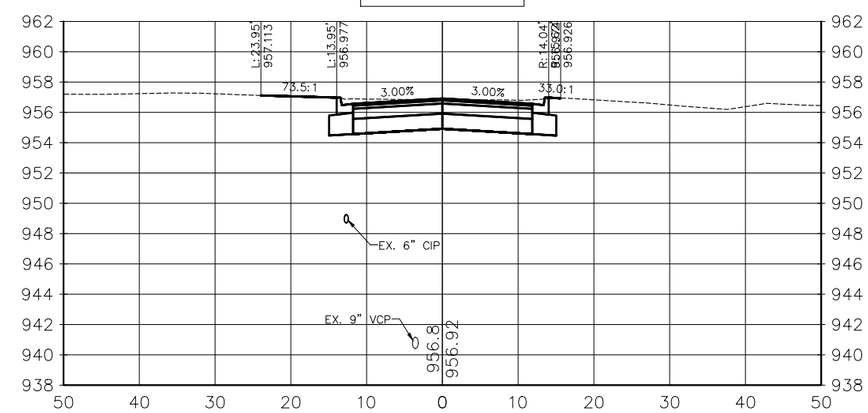

NO	DATE	BY	CKD	APPR	REVISION

I hereby certify that this plan, specification or report was prepared by me or under my direct supervision and that I am a duly Licensed Professional Engineer under the laws of the State of Minnesota.

Signature: MICHAEL J. PAYNE

Date: 3-13-18 License#: 50484

City of Plymouth

PLYMOUTH, MINNESOTA
KILMER PARK STREET RECONSTRUCTION

CROSS SECTIONS
28TH AVE (WEST)

STATE AID PROJECT NO. ----	DRAWN BY M. PAYNE	DATE 2-18
COUNTY PROJECT NO. ----	DESIGNED BY M. PAYNE	2-18
CITY PROJECT NO. ST189001.001	CHECKED BY M. PAYNE	2-18
	REVIEWED BY J. RENNEBERG	2-18

2+50.00

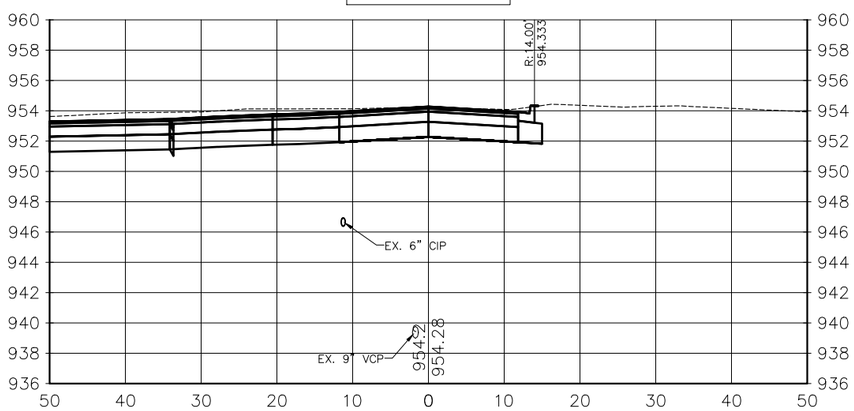

3+00.00

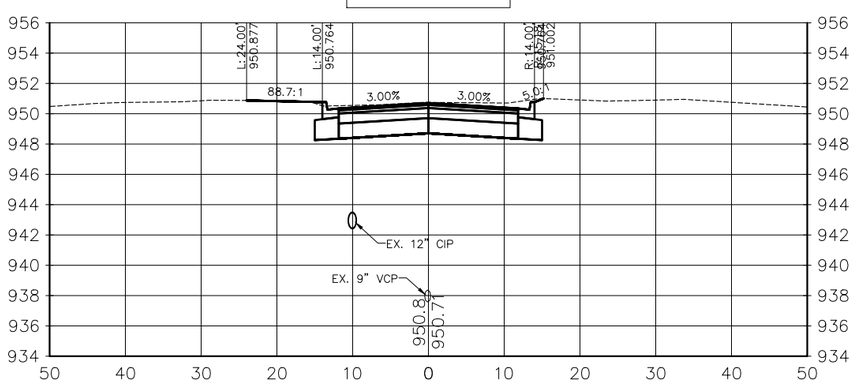

3+50.00

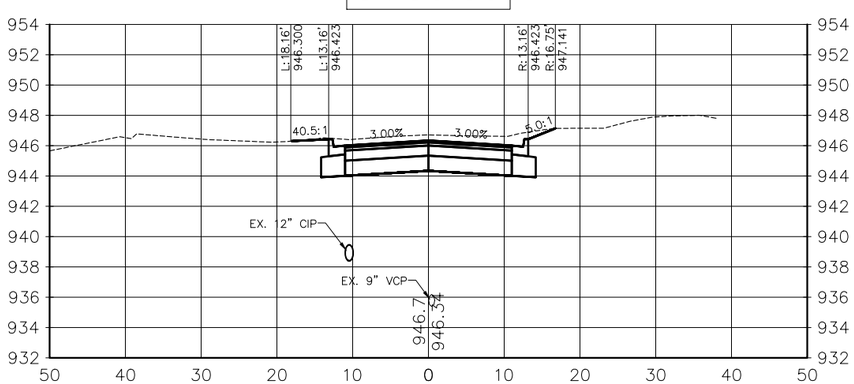

4+00.00

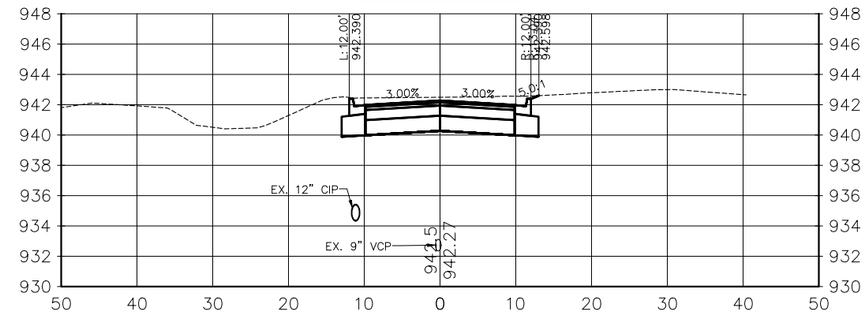

4+20.00

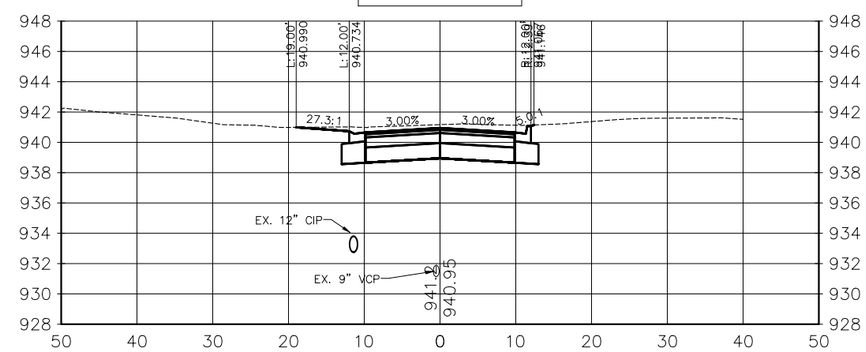

4+50.00

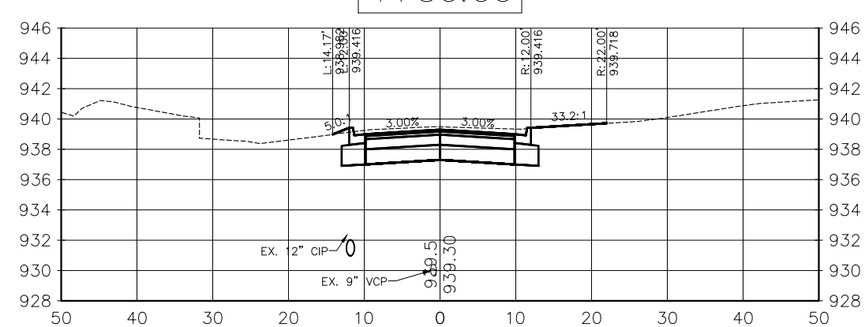

NO	DATE	BY	CKD	APPR	REVISION

I hereby certify that this plan, specification or report was prepared by me or under my direct supervision and that I am a duly Licensed Professional Engineer under the laws of the State of Minnesota.

Signature: MICHAEL J. PAYNE

Date: 3-13-18 License#: 50484

City of Plymouth

PLYMOUTH, MINNESOTA
KILMER PARK STREET
RECONSTRUCTION

CROSS SECTIONS
28TH AVE (WEST)

STATE AID PROJECT NO.	DRAWN BY	DATE
----	M. PAYNE	2-18
COUNTY PROJECT NO.	DESIGNED BY	
----	M. PAYNE	2-18
	CHECKED BY	
CITY PROJECT NO.	M. PAYNE	2-18
ST189001.001	REVIEWED BY	
	J. RENNEBERG	2-18

5+00.00

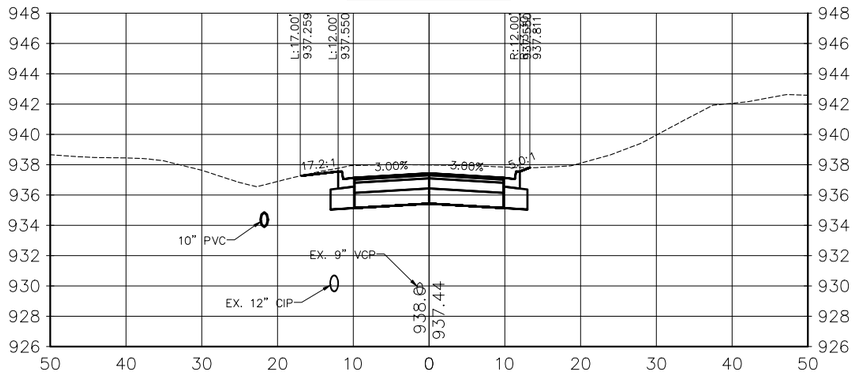

6+00.00

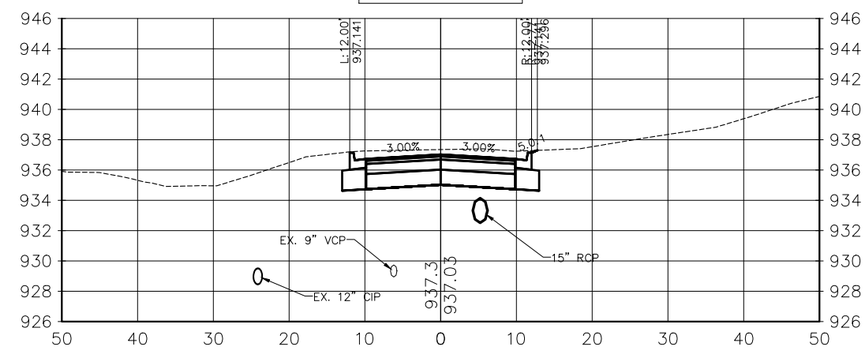

5+50.00

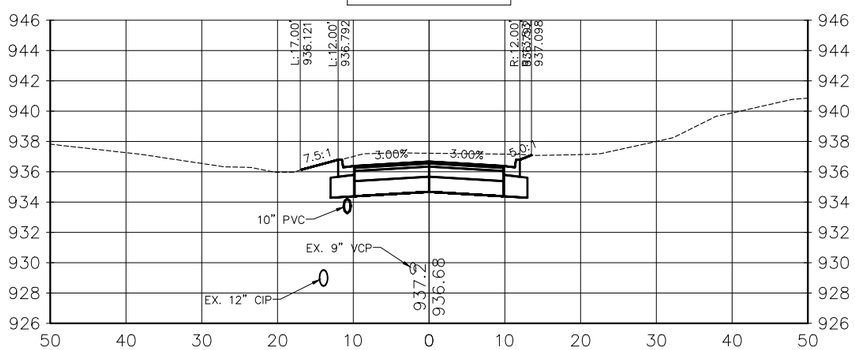

6+50.00

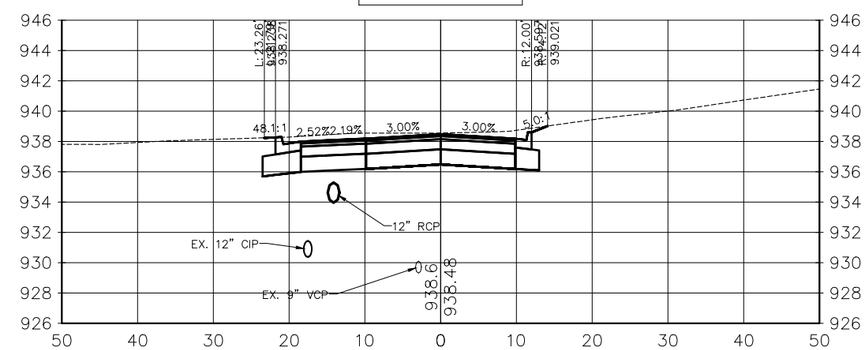

5+75.00

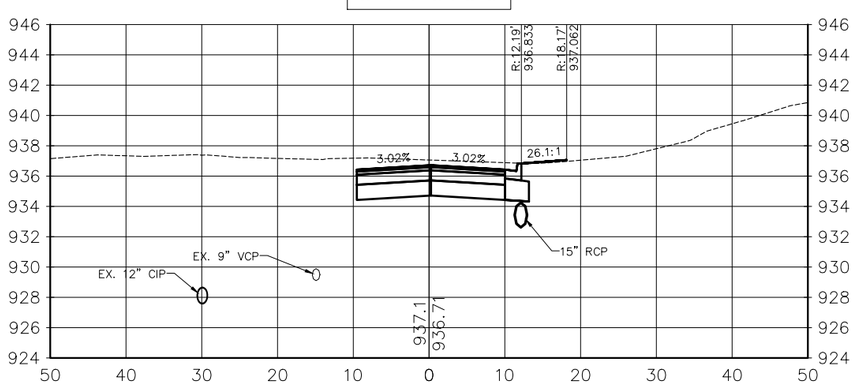

6+75.00

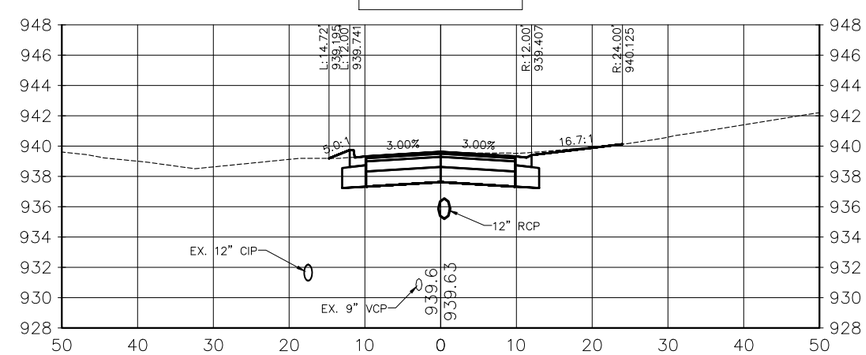

NO	DATE	BY	CKD	APPR	REVISION

I hereby certify that this plan, specification or report was prepared by me or under my direct supervision and that I am a duly Licensed Professional Engineer under the laws of the State of Minnesota.

Signature: MICHAEL J. PAYNE

Date: 3-13-18 License#: 50484

City of Plymouth

PLYMOUTH, MINNESOTA
KILMER PARK STREET RECONSTRUCTION

CROSS SECTIONS
28TH AVE (WEST)

STATE AID PROJECT NO.	DRAWN BY	DATE
----	M. PAYNE	2-18
COUNTY PROJECT NO.	DESIGNED BY	
----	M. PAYNE	2-18
CITY PROJECT NO.	CHECKED BY	
ST189001.001	M. PAYNE	2-18
	REVIEWED BY	
	J. RENNEBERG	2-18

7+00.00

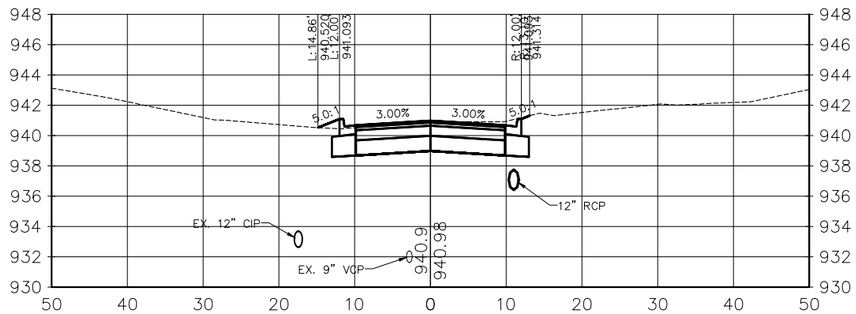

7+85.00

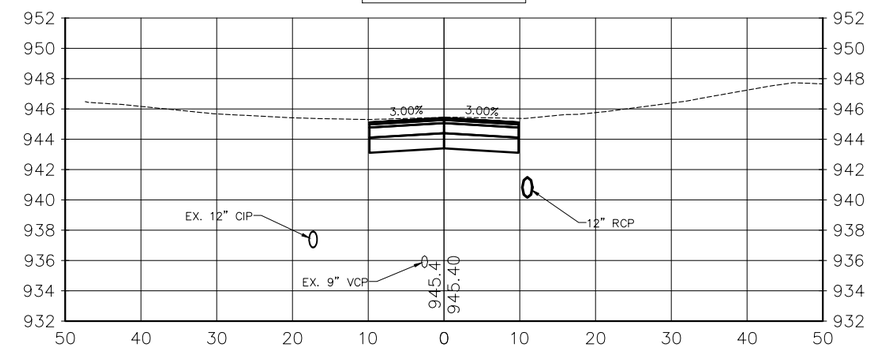

7+50.00

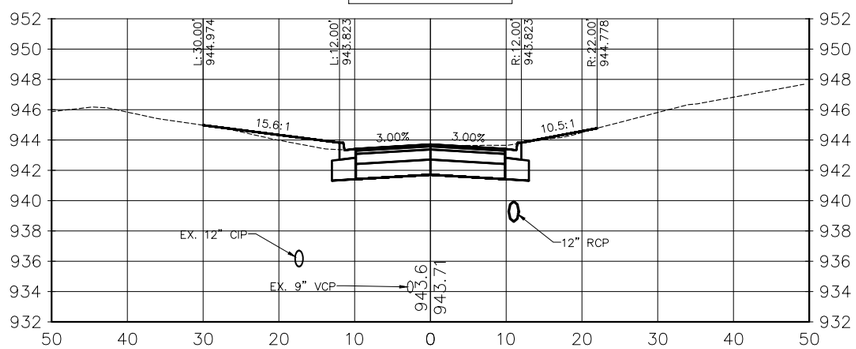

8+00.00

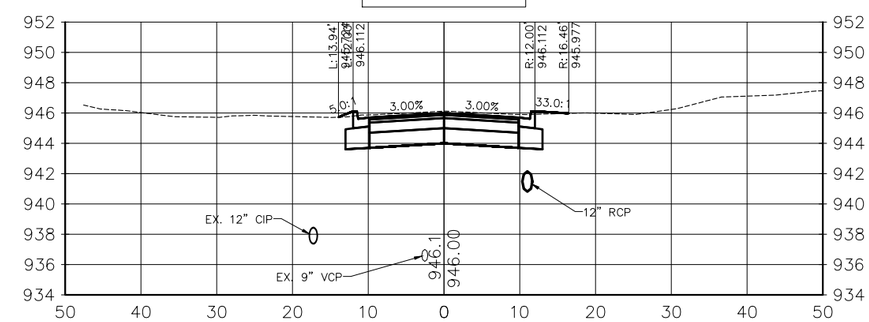

7+75.00

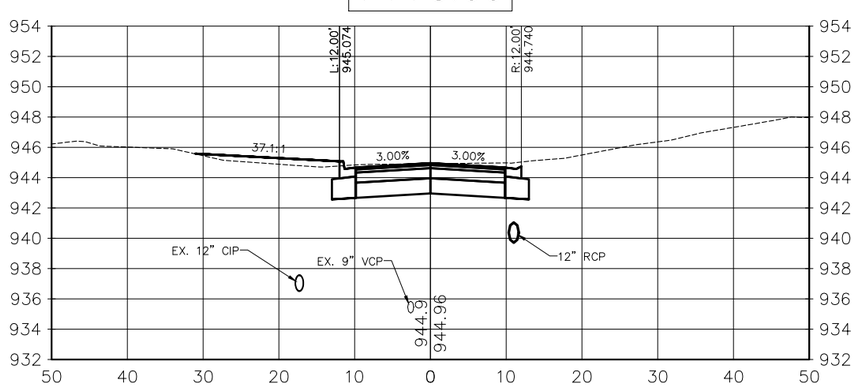

8+40.00

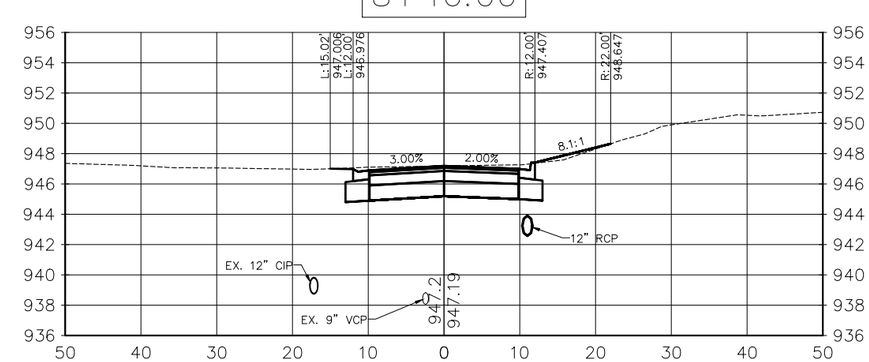

NO	DATE	BY	CKD	APPR	REVISION

I hereby certify that this plan, specification or report was prepared by me or under my direct supervision and that I am a duly Licensed Professional Engineer under the laws of the State of Minnesota.

Signature: MICHAEL J. PAYNE

Date: 3–13–18 License#: 50484

City of Plymouth

PLYMOUTH, MINNESOTA
KILMER PARK STREET
RECONSTRUCTION

CROSS SECTIONS
NATHAN LANE

STATE AID PROJECT NO.	DRAWN BY	DATE
----	M. PAYNE	2–18
COUNTY PROJECT NO.	DESIGNED BY	
----	M. PAYNE	2–18
CITY PROJECT NO.	CHECKED BY	
ST189001.001	M. PAYNE	2–18
	REVIEWED BY	
	J. RENNEBERG	2–18

8+50.00

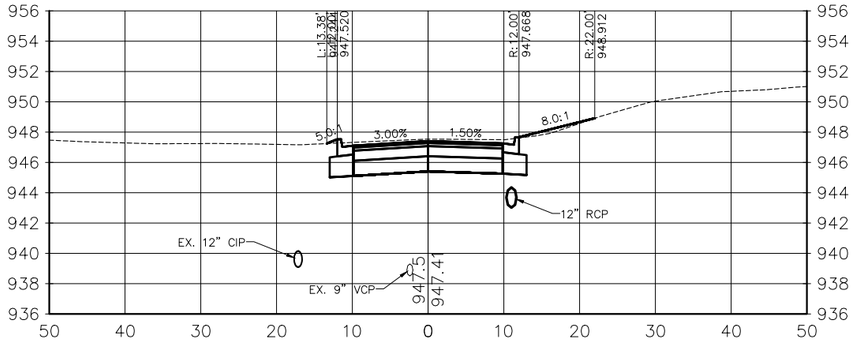

9+25.00

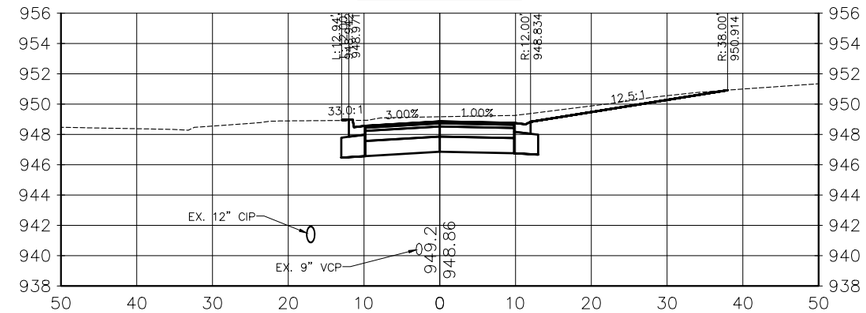

8+80.00

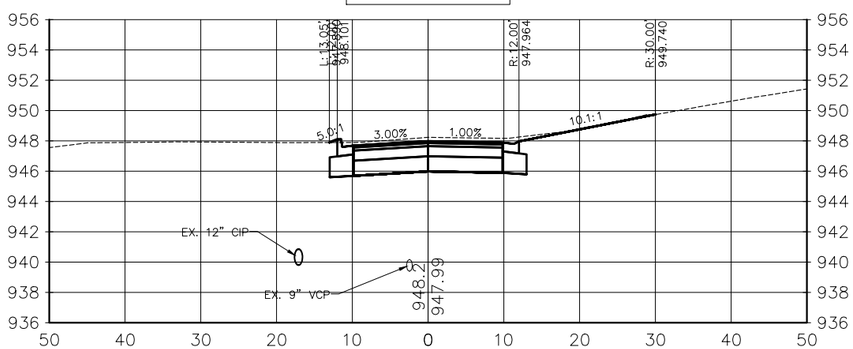

9+50.00

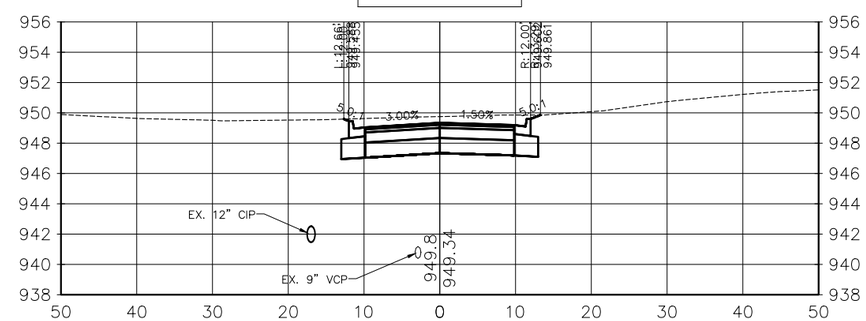

9+00.00

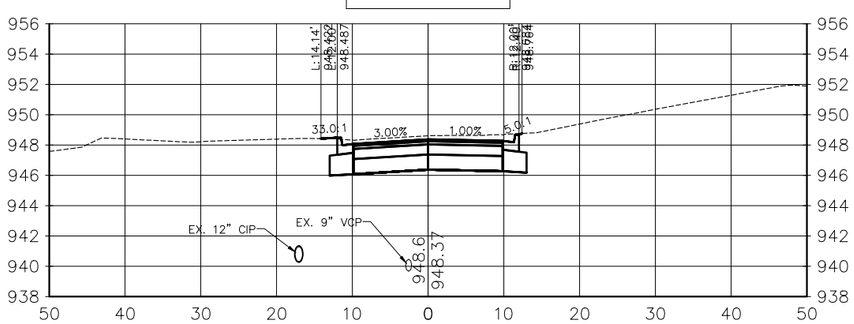

10+00.00

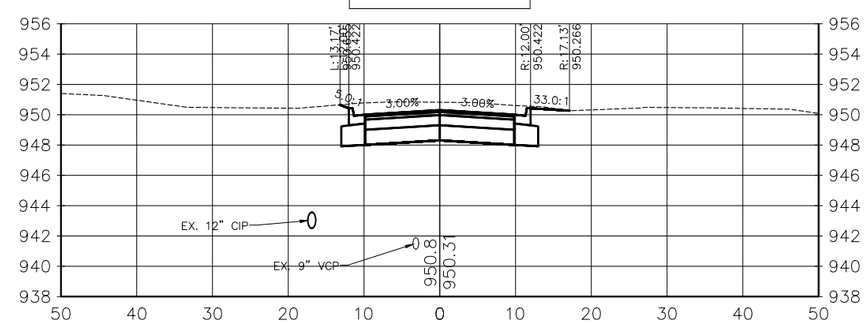

NO	DATE	BY	CKD	APPR	REVISION

I hereby certify that this plan, specification or report was prepared by me or under my direct supervision and that I am a duly Licensed Professional Engineer under the laws of the State of Minnesota.

Signature: MICHAEL J. PAYNE

Date: 3-13-18 License#: 50484

City of Plymouth

PLYMOUTH, MINNESOTA
KILMER PARK STREET
RECONSTRUCTION

CROSS SECTIONS
NATHAN LANE

STATE AID PROJECT NO.	DRAWN BY	DATE
----	M. PAYNE	2-18
COUNTY PROJECT NO.	DESIGNED BY	
----	M. PAYNE	2-18
CITY PROJECT NO.	CHECKED BY	
ST189001.001	M. PAYNE	2-18
	REVIEWED BY	
	J. RENNEBERG	2-18

10+50.00

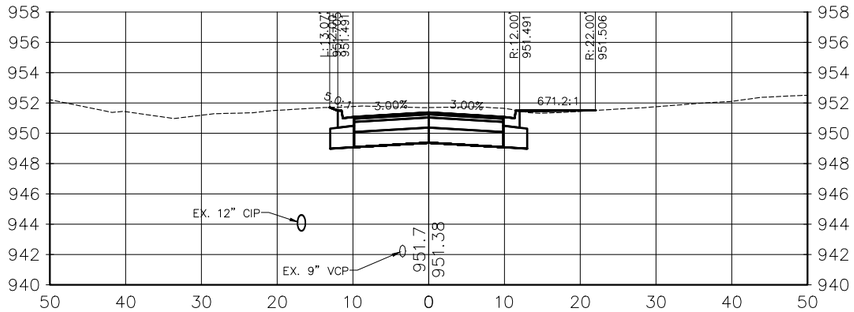

10+70.00

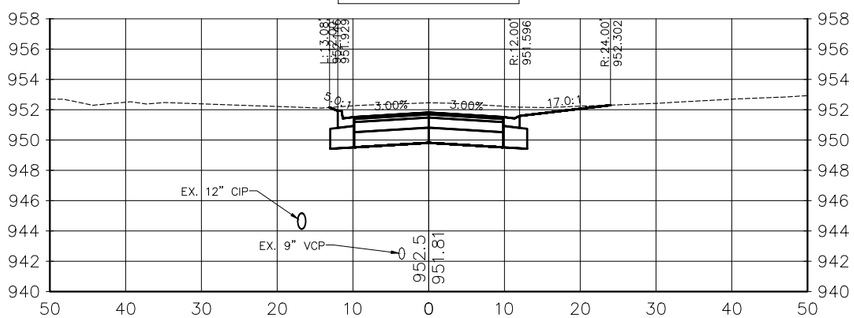

11+00.00

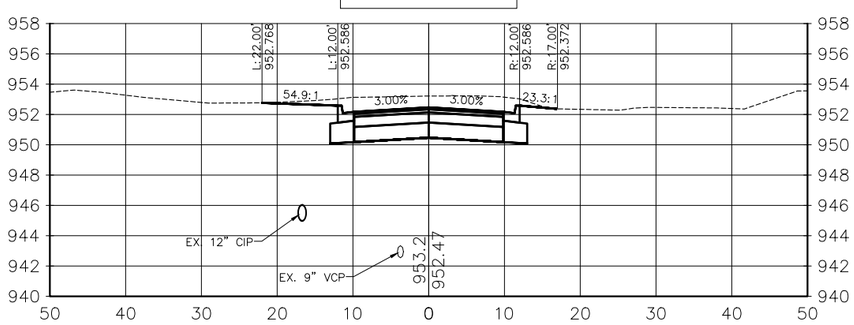

11+20.00

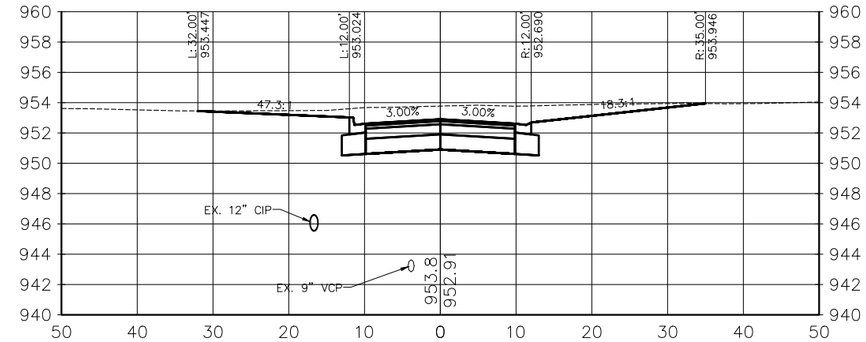

11+40.00

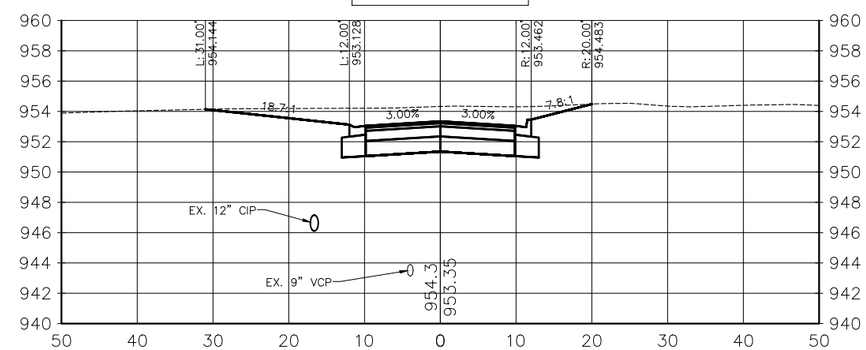

11+50.00

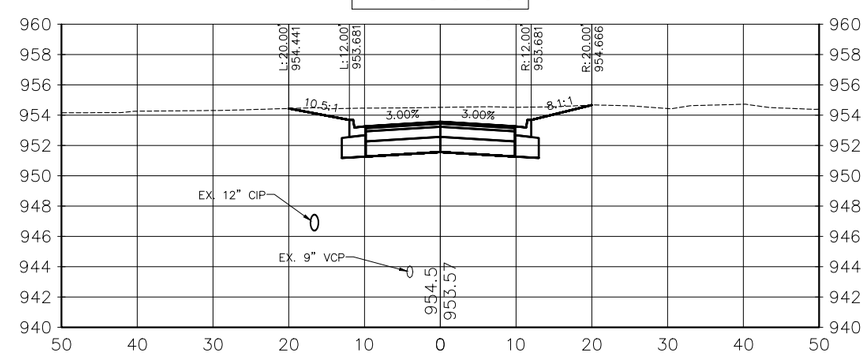

NO	DATE	BY	CKD	APPR	REVISION

I hereby certify that this plan, specification or report was prepared by me or under my direct supervision and that I am a duly Licensed Professional Engineer under the laws of the State of Minnesota.

Signature: MICHAEL J. PAYNE

Date: 3-13-18 License#: 50484

City of Plymouth

PLYMOUTH, MINNESOTA
KILMER PARK STREET RECONSTRUCTION

CROSS SECTIONS
NATHAN LANE

STATE AID PROJECT NO.	DRAWN BY	DATE
----	M. PAYNE	2-18
COUNTY PROJECT NO.	DESIGNED BY	
----	M. PAYNE	2-18
CITY PROJECT NO.	CHECKED BY	
ST189001.001	M. PAYNE	2-18
	REVIEWED BY	
	J. RENNEBERG	2-18

12+00.00

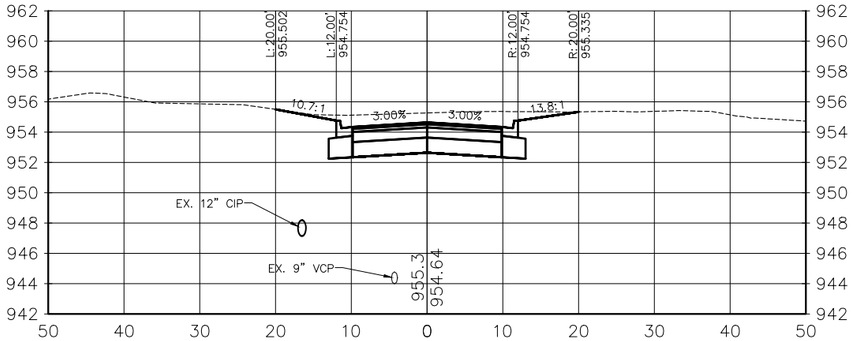

13+00.00

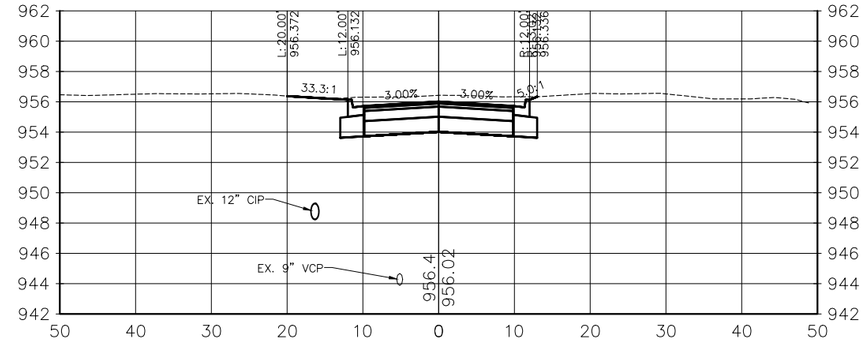

12+50.00

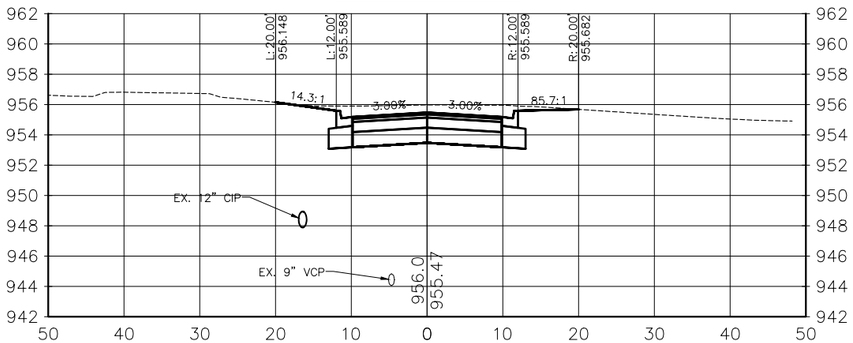

13+35.00

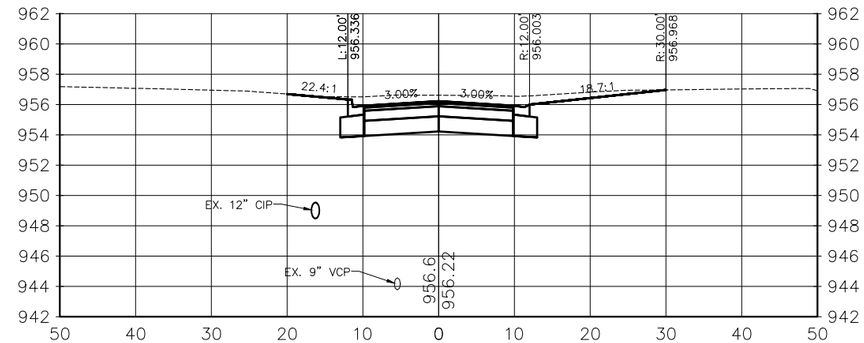

12+70.00

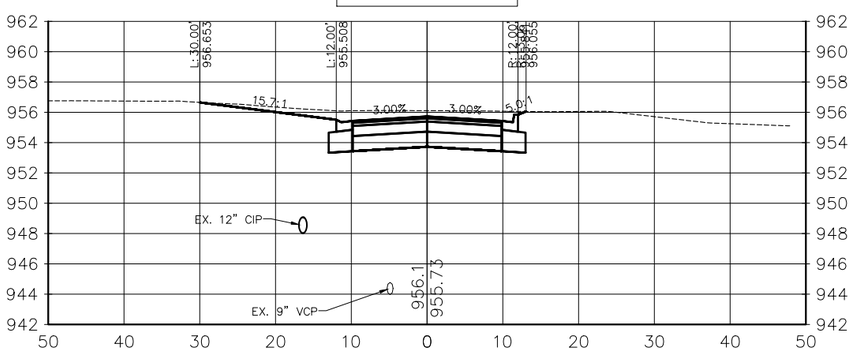

13+50.00

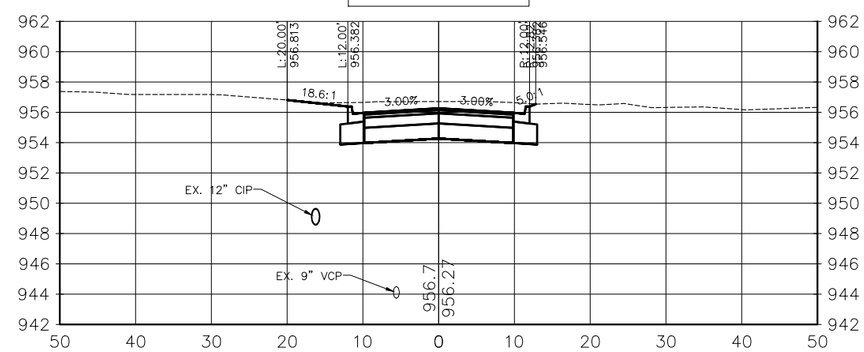

NO	DATE	BY	CKD	APPR	REVISION

I hereby certify that this plan, specification or report was prepared by me or under my direct supervision and that I am a duly Licensed Professional Engineer under the laws of the State of Minnesota.

Signature: MICHAEL J. PAYNE

Date: 3-13-18 License#: 50484

City of Plymouth

PLYMOUTH, MINNESOTA
KILMER PARK STREET RECONSTRUCTION

CROSS SECTIONS
NATHAN LANE

STATE AID PROJECT NO.	DRAWN BY	DATE
----	M. PAYNE	2-18
COUNTY PROJECT NO.	DESIGNED BY	
----	M. PAYNE	2-18
CITY PROJECT NO.	CHECKED BY	
ST189001.001	M. PAYNE	2-18
	REVIEWED BY	
	J. RENNEBERG	2-18

13+75.00

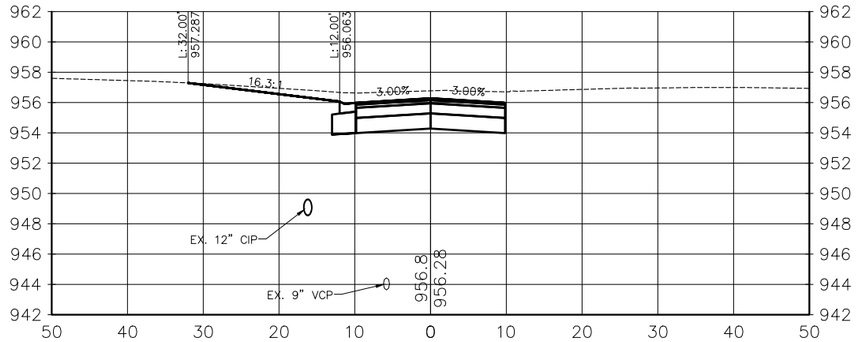

14+50.00

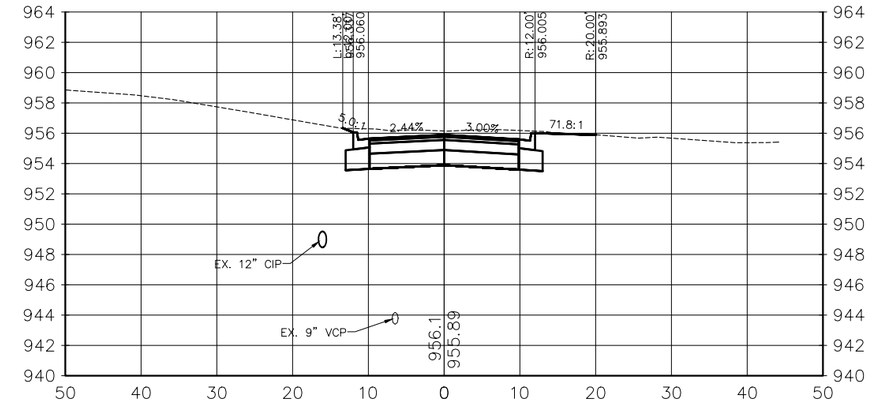

13+90.00

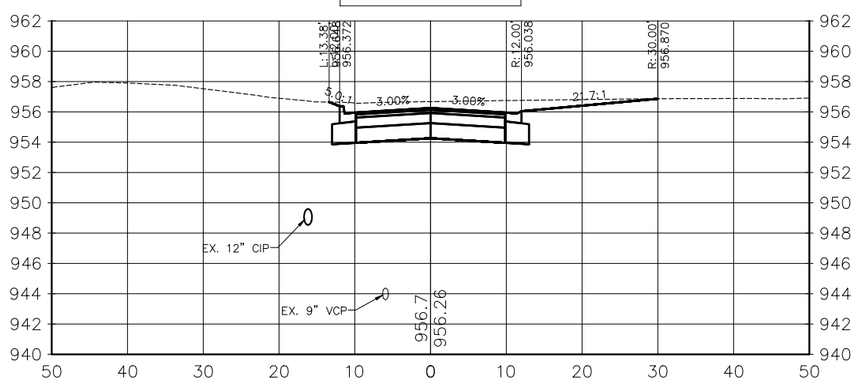

14+95.00

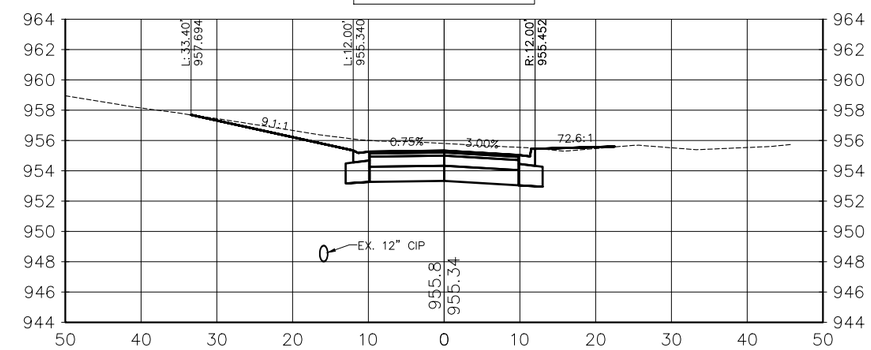

14+00.00

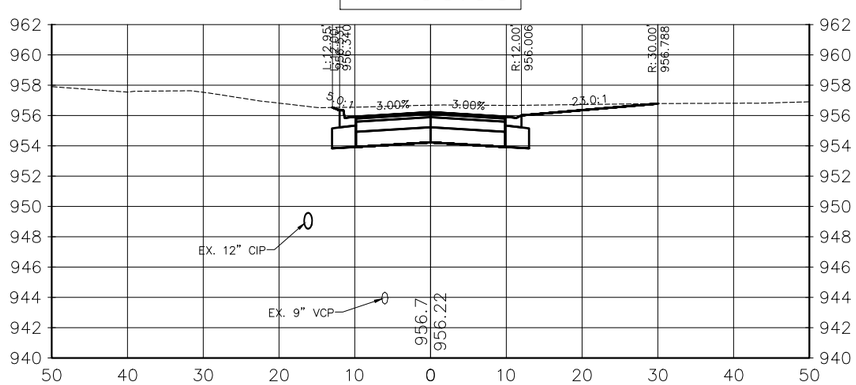

15+00.00

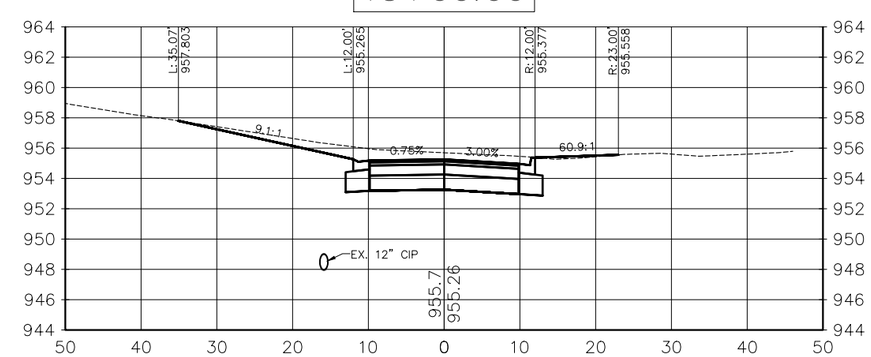

NO	DATE	BY	CKD	APPR	REVISION

I hereby certify that this plan, specification or report was prepared by me or under my direct supervision and that I am a duly Licensed Professional Engineer under the laws of the State of Minnesota.

Signature: MICHAEL J. PAYNE

Date: 3–13–18 License#: 50484

City of Plymouth

PLYMOUTH, MINNESOTA
KILMER PARK STREET
RECONSTRUCTION

CROSS SECTIONS
NATHAN LANE

STATE AID PROJECT NO. ----	DRAWN BY M. PAYNE	DATE 2–18
COUNTY PROJECT NO. ----	DESIGNED BY M. PAYNE	2–18
CITY PROJECT NO. ST189001.001	CHECKED BY M. PAYNE	2–18
	REVIEWED BY J. RENNEBERG	2–18

15+25.00

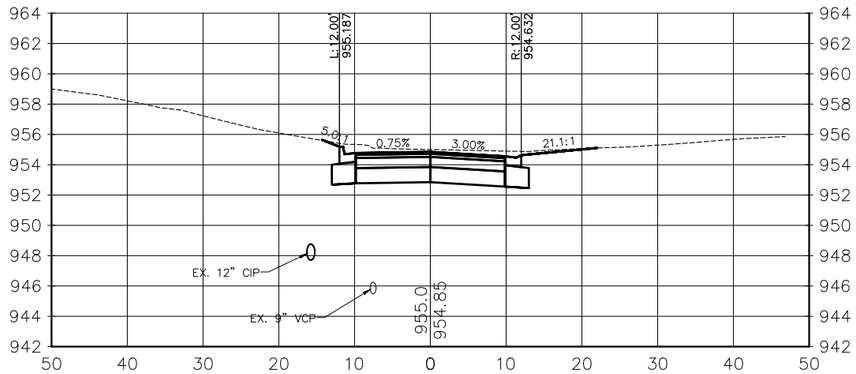

15+55.00

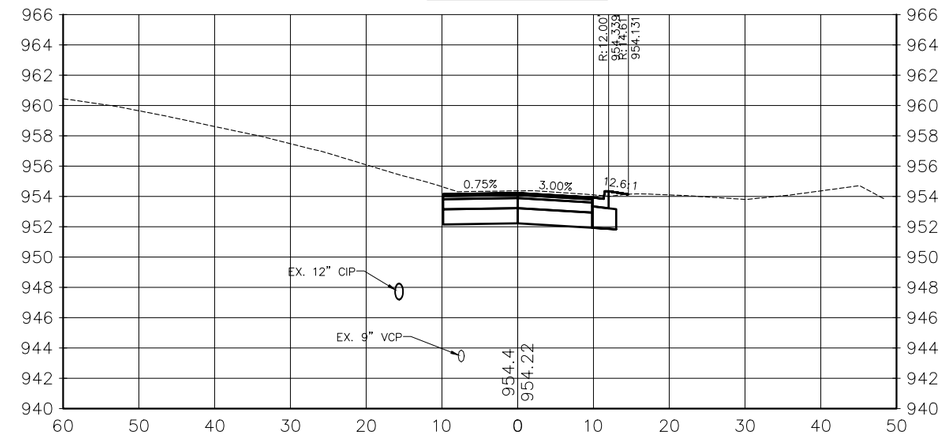

15+50.00

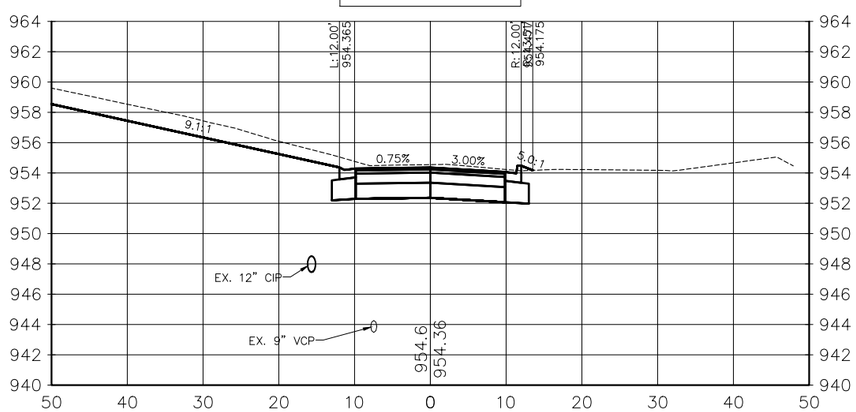

15+80.00

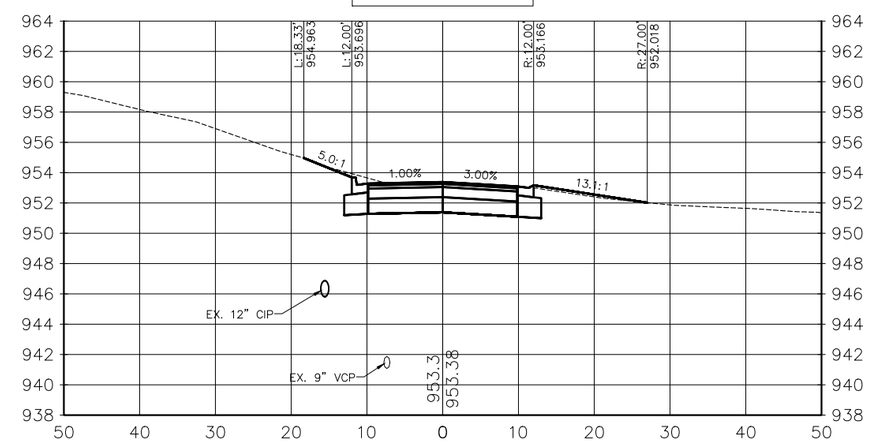

NO	DATE	BY	CKD	APPR	REVISION

I hereby certify that this plan, specification or report was prepared by me or under my direct supervision and that I am a duly Licensed Professional Engineer under the laws of the State of Minnesota.

Signature: MICHAEL J. PAYNE

Date: 3-13-18 License#: 50484

City of Plymouth

PLYMOUTH, MINNESOTA
KILMER PARK STREET RECONSTRUCTION

CROSS SECTIONS
NATHAN LANE

STATE AID PROJECT NO.	DRAWN BY	DATE
----	M. PAYNE	2-18
COUNTY PROJECT NO.	DESIGNED BY	
----	M. PAYNE	2-18
CITY PROJECT NO.	CHECKED BY	
ST189001.001	M. PAYNE	2-18
	REVIEWED BY	
	J. RENNEBERG	2-18

16+00.00

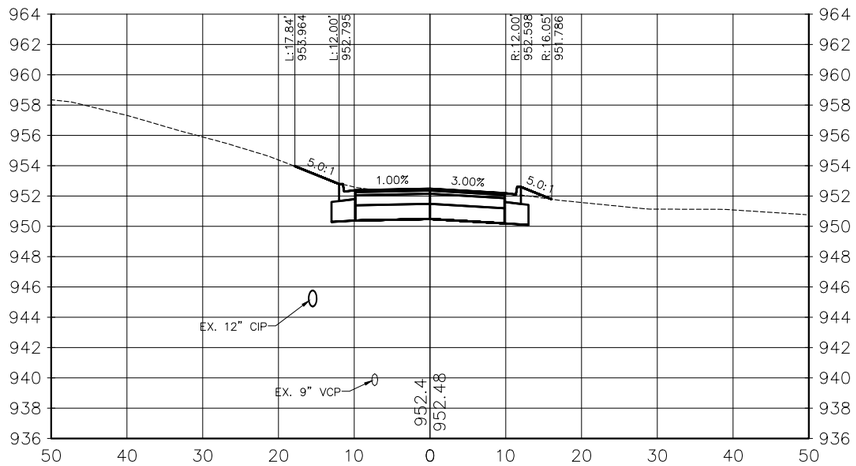

17+00.00

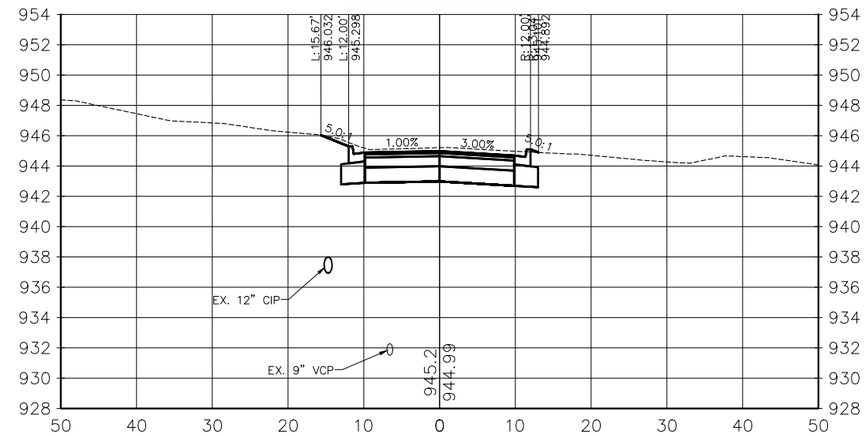

16+50.00

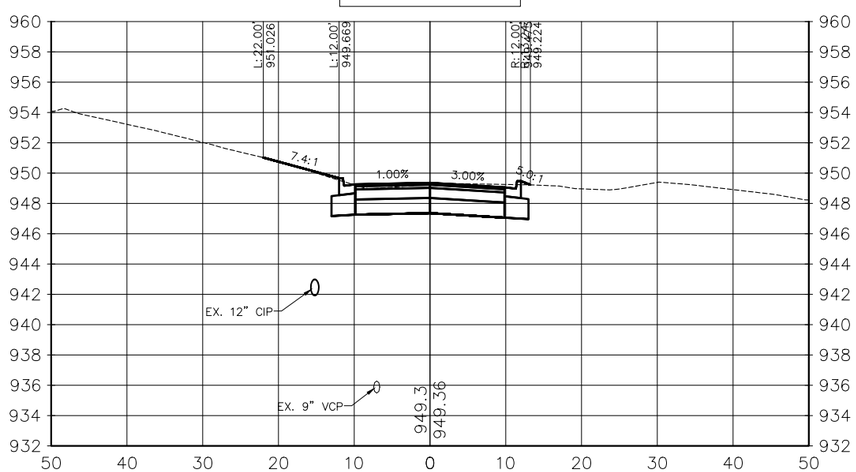

17+25.00

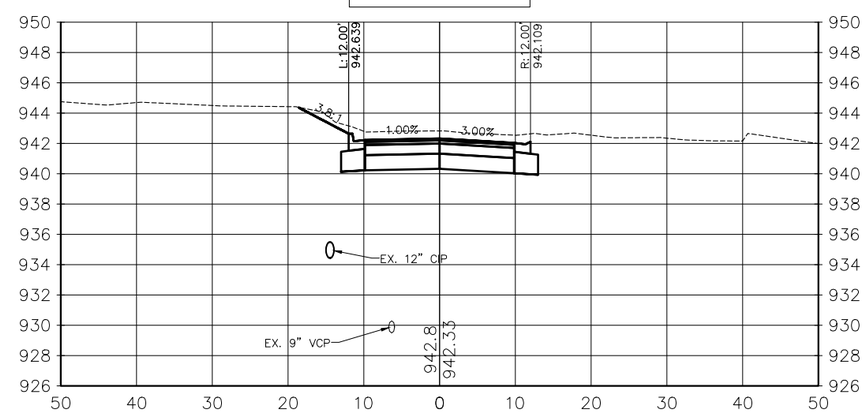

NO	DATE	BY	CKD	APPR	REVISION

I hereby certify that this plan, specification or report was prepared by me or under my direct supervision and that I am a duly Licensed Professional Engineer under the laws of the State of Minnesota.

Signature: MICHAEL J. PAYNE

Date: 3-13-18 License#: 50484

City of Plymouth

PLYMOUTH, MINNESOTA
KILMER PARK STREET
RECONSTRUCTION

CROSS SECTIONS
NATHAN LANE

STATE AID PROJECT NO.	DRAWN BY	DATE
----	M. PAYNE	2-18
COUNTY PROJECT NO.	DESIGNED BY	
----	M. PAYNE	2-18
CITY PROJECT NO.	CHECKED BY	
ST189001.001	M. PAYNE	2-18
	REVIEWED BY	
	J. RENNEBERG	2-18

17+50.00

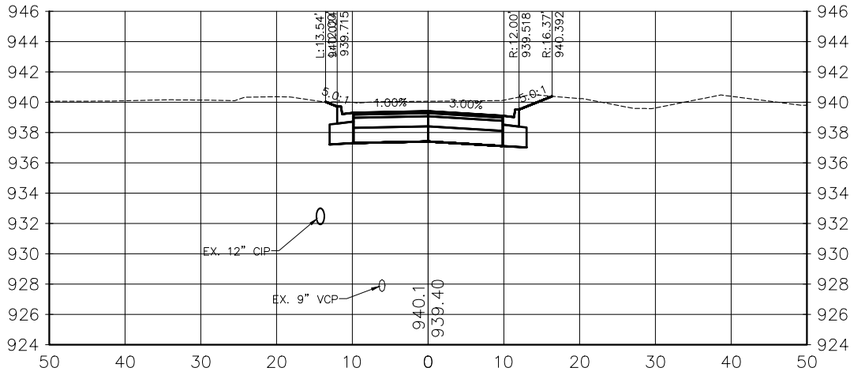

18+50.00

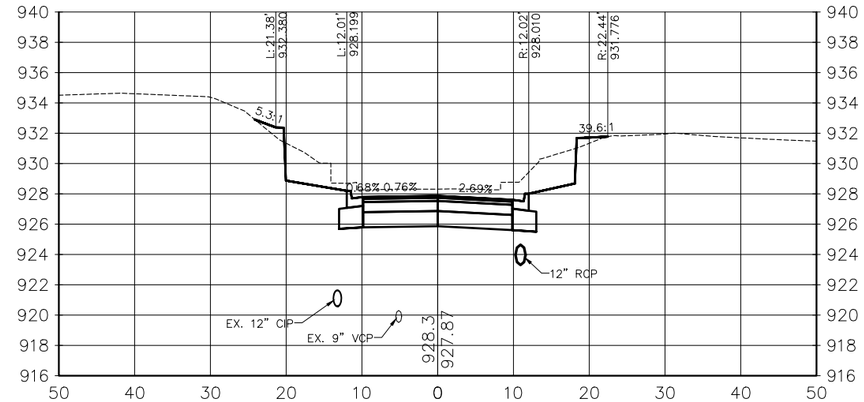

17+60.00

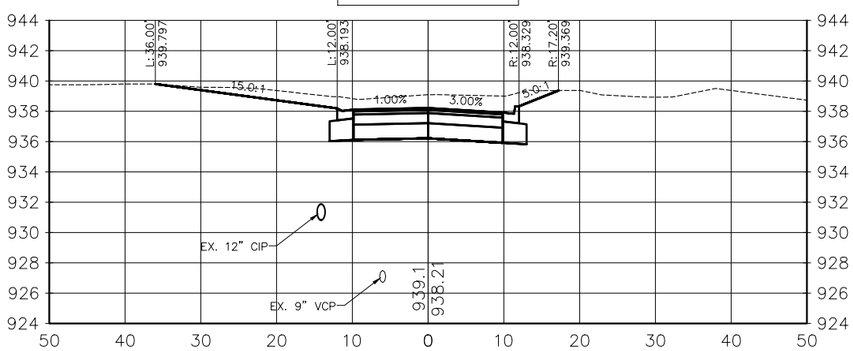

18+00.00

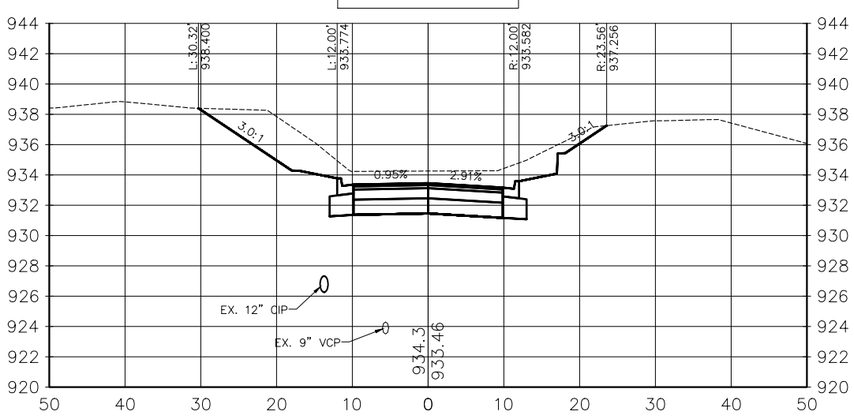

NO	DATE	BY	CKD	APPR	REVISION

I hereby certify that this plan, specification or report was prepared by me or under my direct supervision and that I am a duly Licensed Professional Engineer under the laws of the State of Minnesota.

Signature: MICHAEL J. PAYNE

Date: 3–13–18 License#: 50484

City of Plymouth

PLYMOUTH, MINNESOTA
KILMER PARK STREET RECONSTRUCTION

CROSS SECTIONS
NATHAN LANE

STATE AID PROJECT NO. ____	DRAWN BY M. PAYNE	DATE 2–18
COUNTY PROJECT NO. ____	DESIGNED BY M. PAYNE	2–18
	CHECKED BY M. PAYNE	2–18
CITY PROJECT NO. ST189001.001	REVIEWED BY J. RENNEBERG	2–18

0+50.00

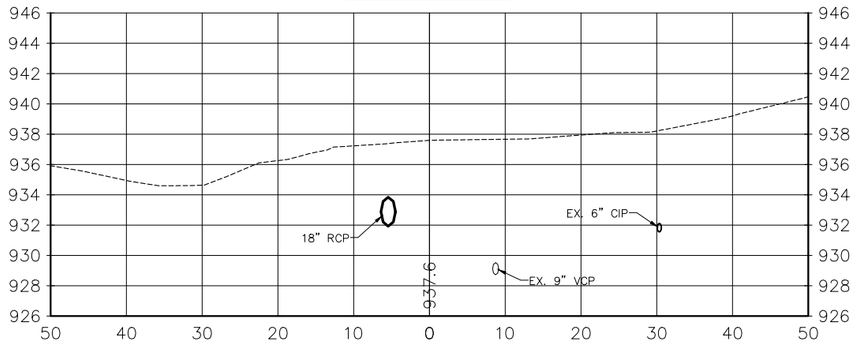

1+50.00

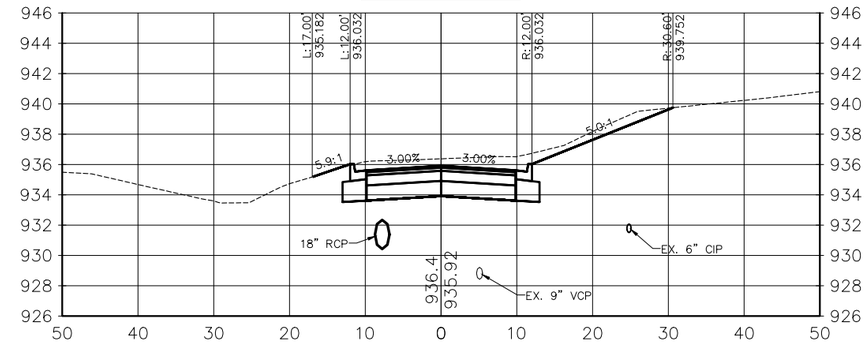

1+00.00

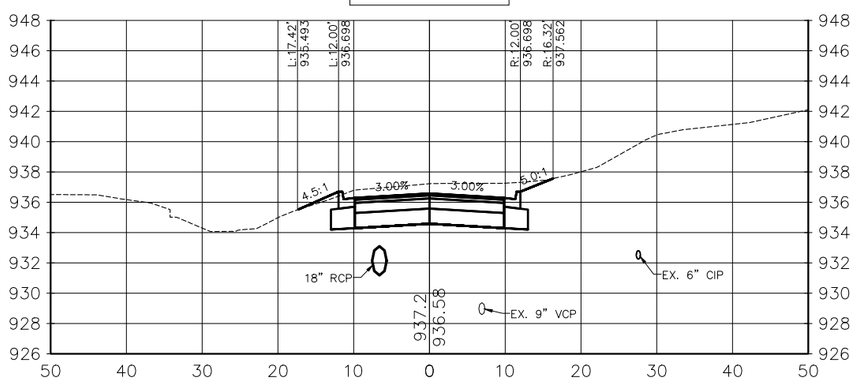

2+00.00

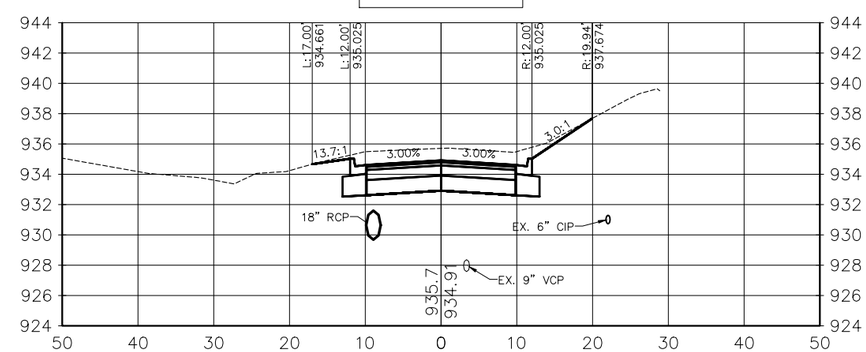

1+25.00

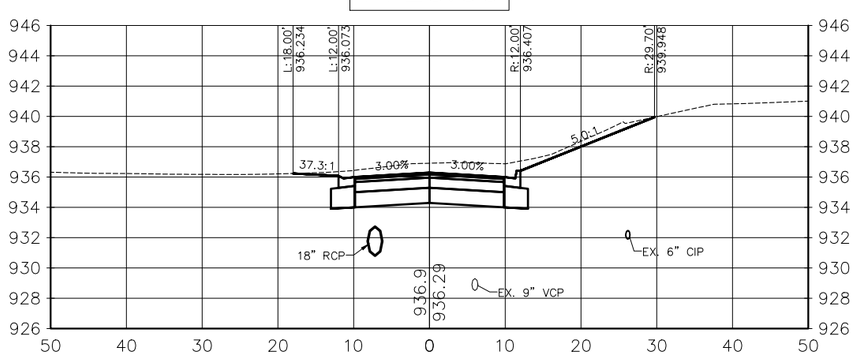

2+30.00

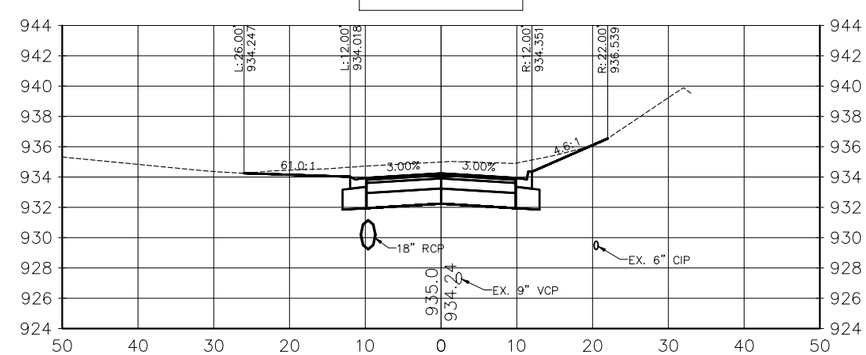

NO	DATE	BY	CKD	APPR	REVISION

I hereby certify that this plan, specification or report was prepared by me or under my direct supervision and that I am a duly Licensed Professional Engineer under the laws of the State of Minnesota.

Signature: MICHAEL J. PAYNE

Date: 3–13–18 License#: 50484

City of Plymouth

PLYMOUTH, MINNESOTA
KILMER PARK STREET
RECONSTRUCTION

CROSS SECTIONS
28TH AVE (EAST)

STATE AID PROJECT NO.	DRAWN BY	DATE
----	M. PAYNE	2–18
COUNTY PROJECT NO.	DESIGNED BY	
----	M. PAYNE	2–18
	CHECKED BY	
CITY PROJECT NO.	M. PAYNE	2–18
ST189001.001	REVIEWED BY	
	J. RENNEBERG	2–18

2+50.00

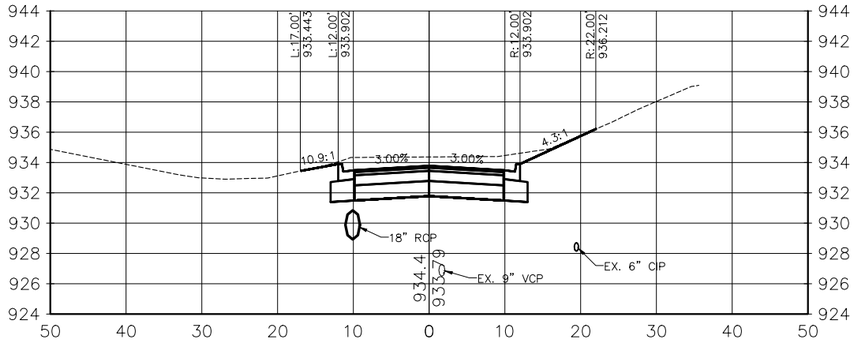

3+65.00

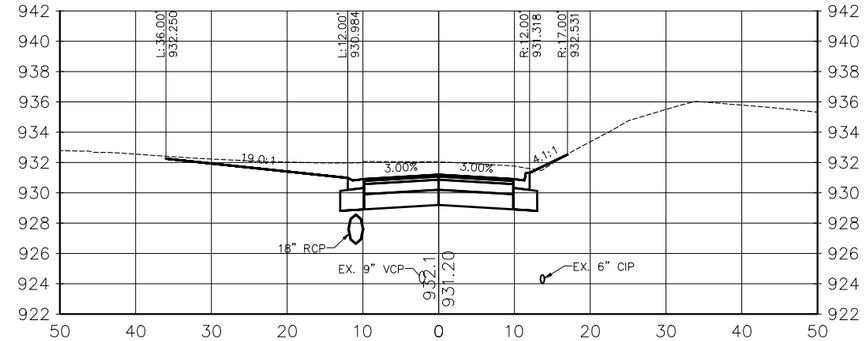

3+00.00

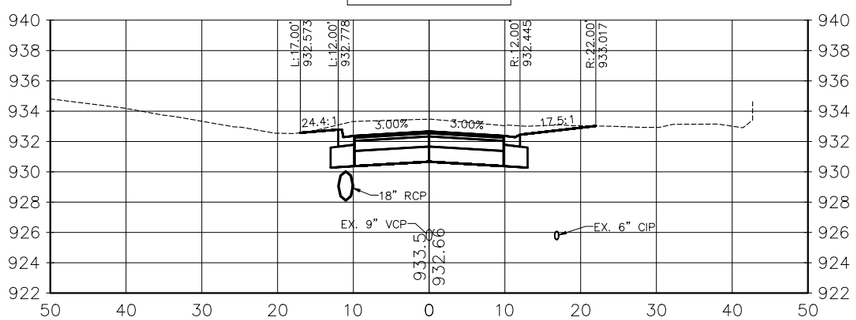

4+00.00

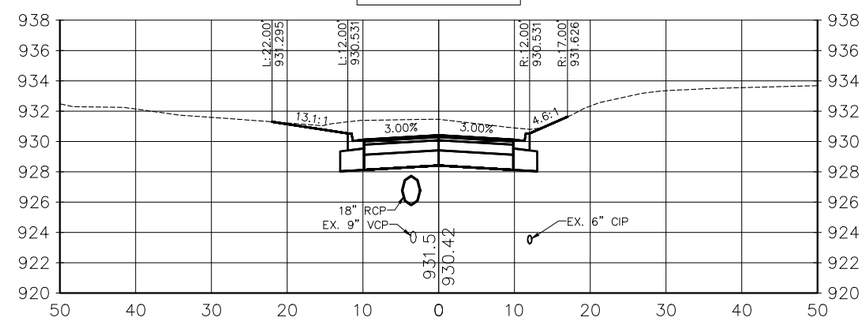

3+50.00

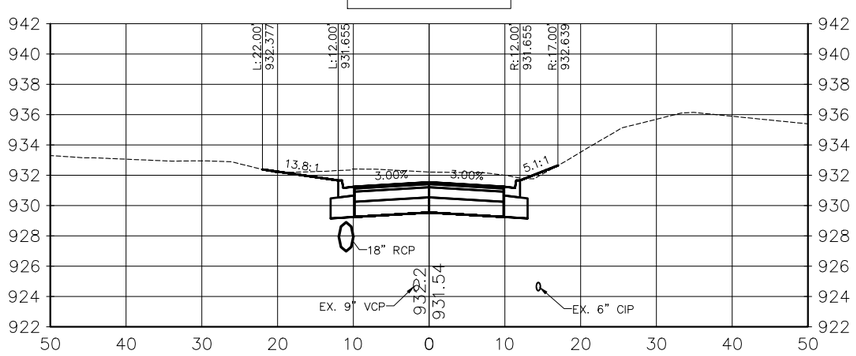

4+50.00

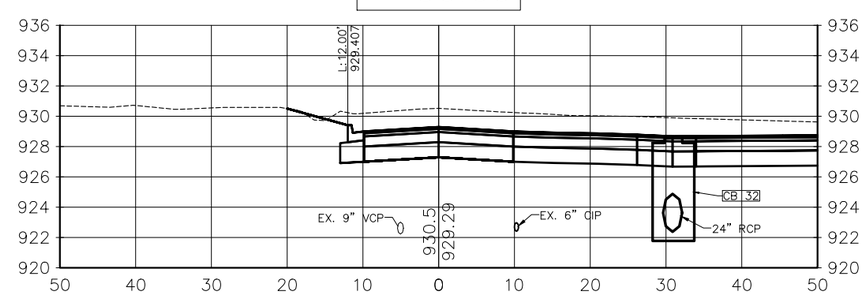

NO	DATE	BY	CKD	APPR	REVISION

I hereby certify that this plan, specification or report was prepared by me or under my direct supervision and that I am a duly Licensed Professional Engineer under the laws of the State of Minnesota.

Signature: MICHAEL J. PAYNE

Date: 3-13-18 License#: 50484

City of Plymouth

PLYMOUTH, MINNESOTA
KILMER PARK STREET
RECONSTRUCTION

CROSS SECTIONS
28TH AVE (EAST)

STATE AID PROJECT NO.	DRAWN BY	DATE
----	M. PAYNE	2-18
COUNTY PROJECT NO.	DESIGNED BY	
----	M. PAYNE	2-18
	CHECKED BY	
CITY PROJECT NO.	M. PAYNE	2-18
ST189001.001	REVIEWED BY	
	J. RENNEBERG	2-18

4+63.00

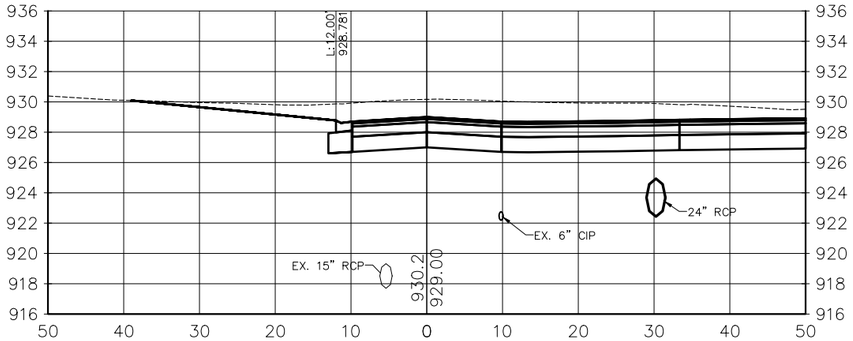

5+00.00

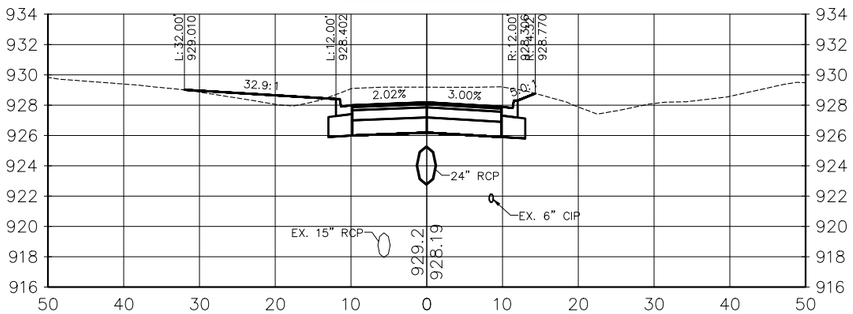

5+50.00

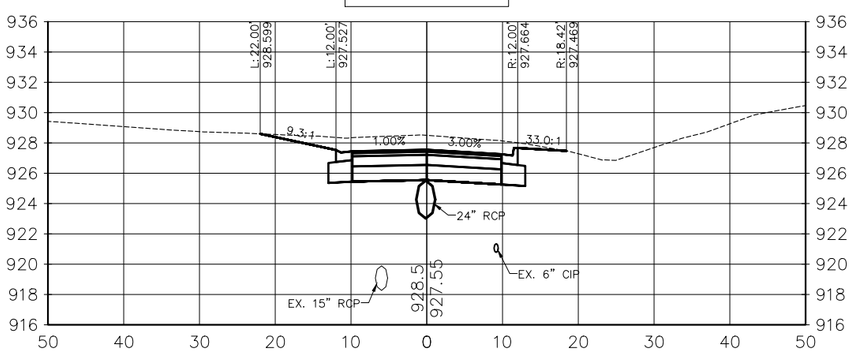

6+00.00

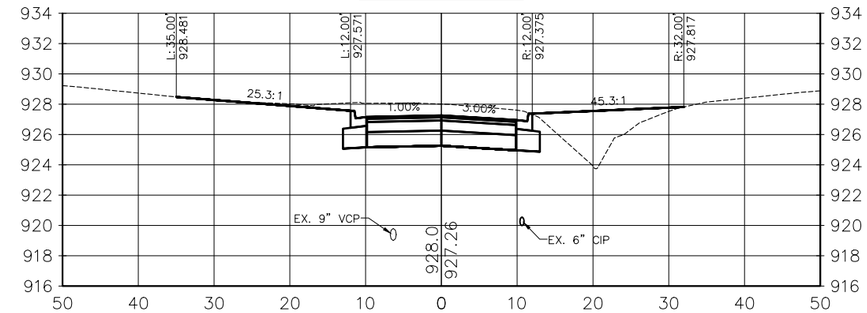

6+10.00

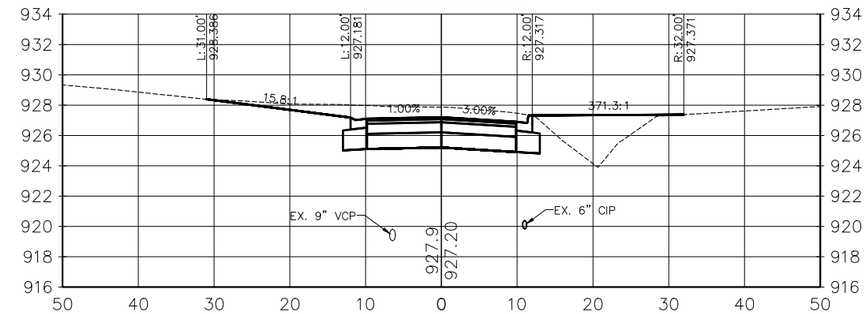

6+50.00

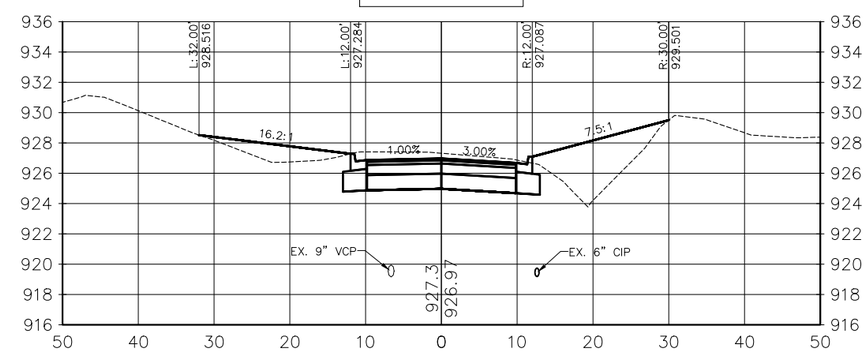

NO	DATE	BY	CKD	APPR	REVISION

I hereby certify that this plan, specification or report was prepared by me or under my direct supervision and that I am a duly Licensed Professional Engineer under the laws of the State of Minnesota.

Signature: MICHAEL J. PAYNE

Date: 3-13-18 License#: 50484

City of Plymouth

PLYMOUTH, MINNESOTA
KILMER PARK STREET
RECONSTRUCTION

CROSS SECTIONS
28TH AVE (EAST)

STATE AID PROJECT NO. ----	DRAWN BY M. PAYNE	DATE 2-18
COUNTY PROJECT NO. ----	DESIGNED BY M. PAYNE	2-18
	CHECKED BY M. PAYNE	2-18
CITY PROJECT NO. ST189001.001	REVIEWED BY J. RENNEBERG	2-18

7+00.00

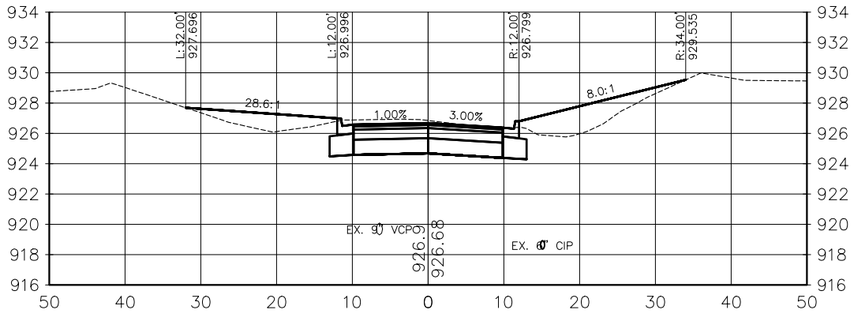

7+50.00

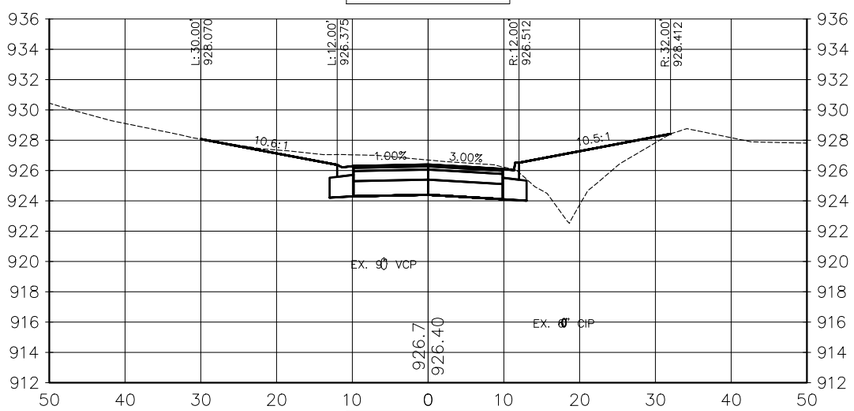

7+60.00

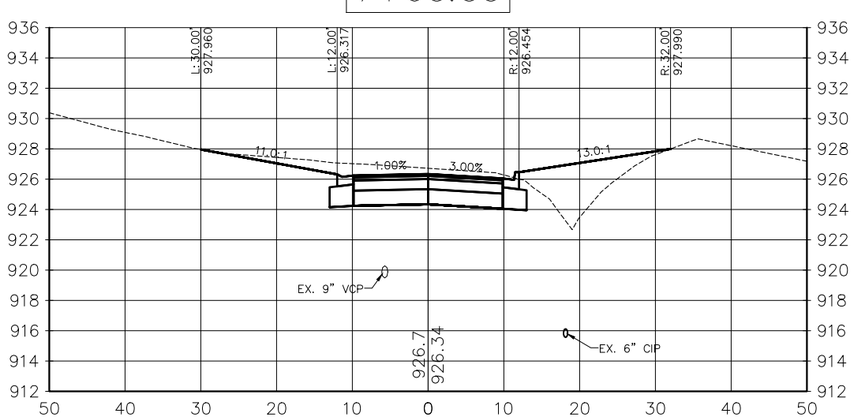

8+00.00

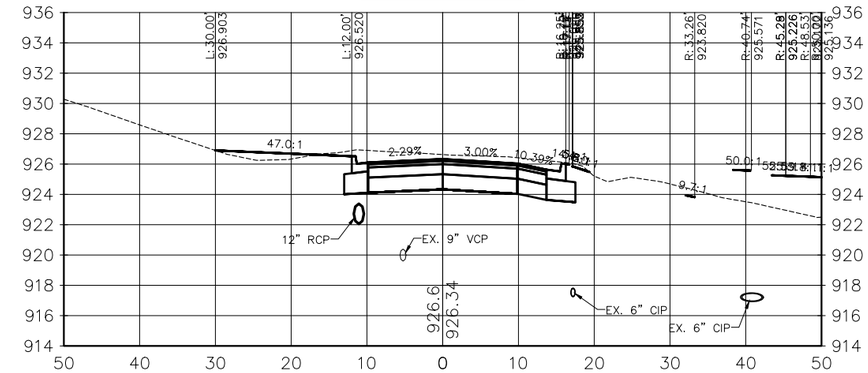

8+50.00

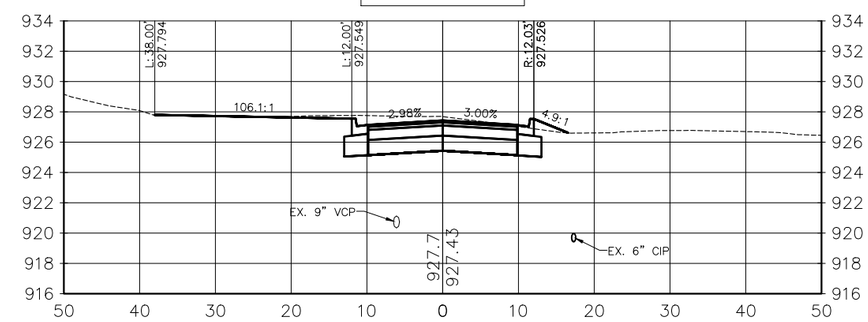

8+60.00

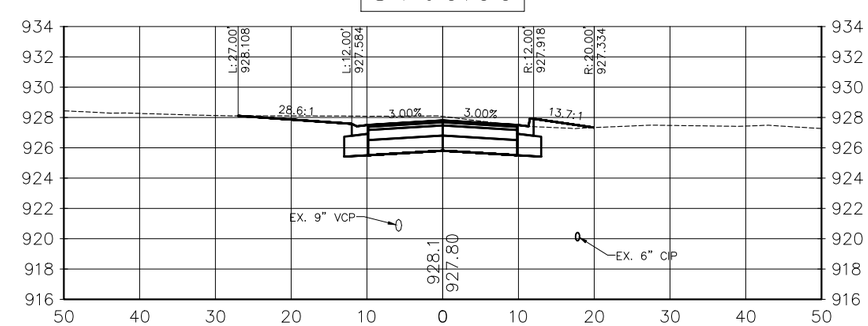

NO	DATE	BY	CKD	APPR	REVISION

I hereby certify that this plan, specification or report was prepared by me or under my direct supervision and that I am a duly Licensed Professional Engineer under the laws of the State of Minnesota.

Signature: MICHAEL J. PAYNE

Date: 3–13–18 License#: 50484

City of Plymouth

PLYMOUTH, MINNESOTA
KILMER PARK STREET
RECONSTRUCTION

CROSS SECTIONS
28TH AVE (EAST)

STATE AID PROJECT NO.	DRAWN BY	DATE
----	M. PAYNE	2–18
COUNTY PROJECT NO.	DESIGNED BY	
----	M. PAYNE	2–18
CITY PROJECT NO.	CHECKED BY	
ST189001.001	M. PAYNE	2–18
	REVIEWED BY	
	J. RENNEBERG	2–18

9+00.00

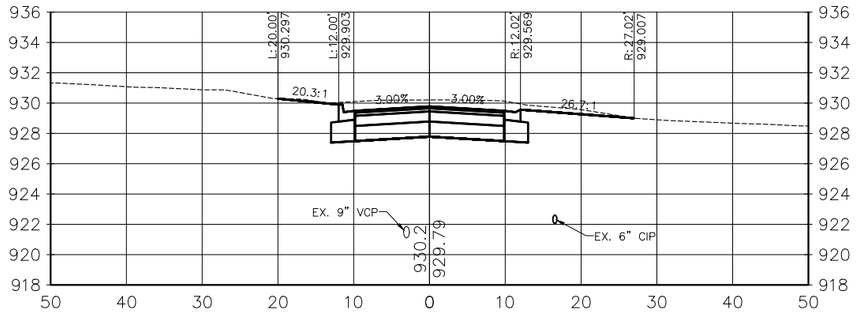

10+00.00

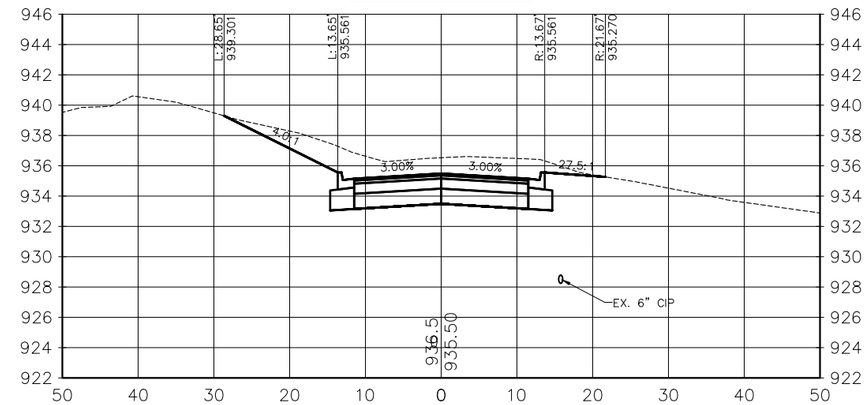

9+35.00

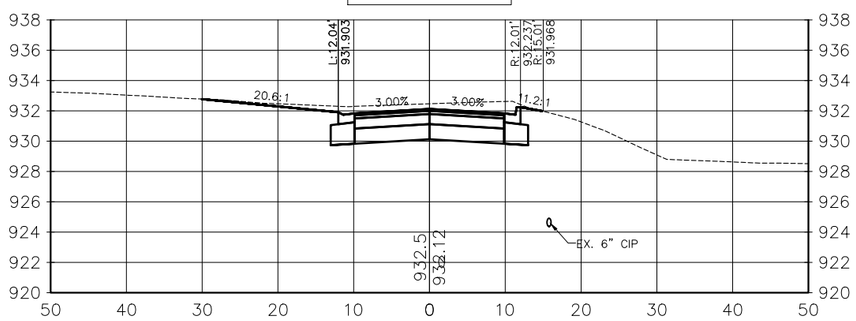

10+40.00

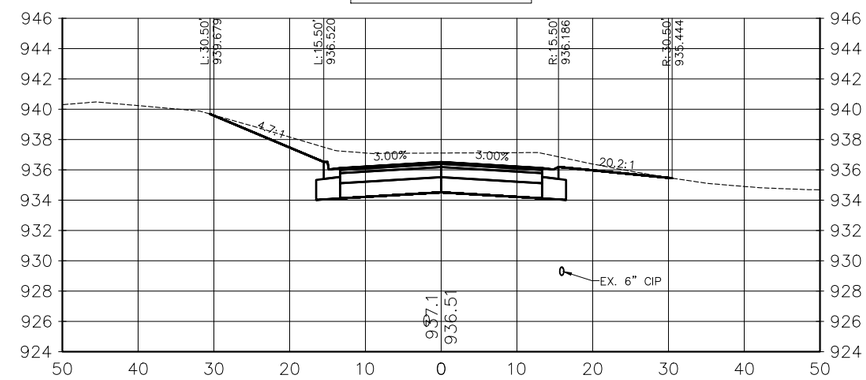

9+50.00

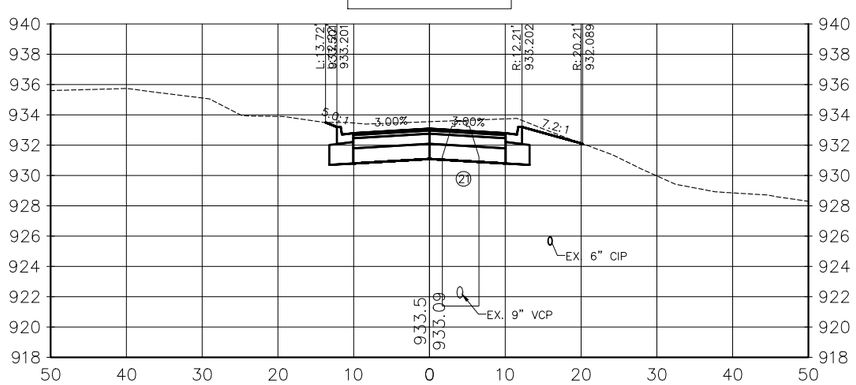

10+50.00

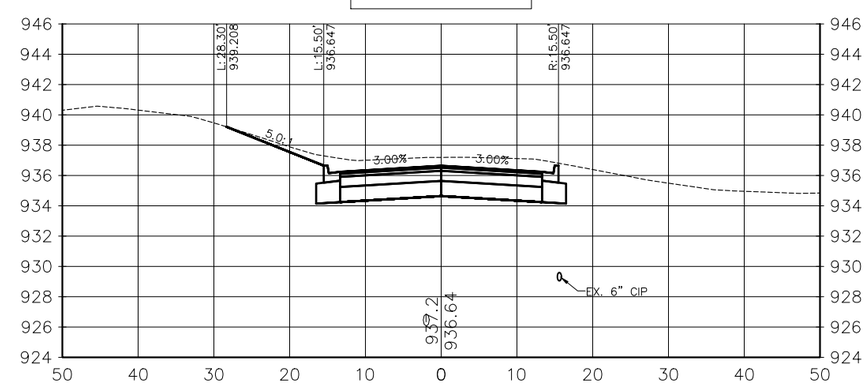

NO	DATE	BY	CKD	APPR	REVISION

I hereby certify that this plan, specification or report was prepared by me or under my direct supervision and that I am a duly Licensed Professional Engineer under the laws of the State of Minnesota.

Signature: MICHAEL J. PAYNE

Date: 3–13–18 License#: 50484

City of Plymouth

PLYMOUTH, MINNESOTA
KILMER PARK STREET
RECONSTRUCTION

CROSS SECTIONS
28TH AVE (EAST)

STATE AID PROJECT NO.	DRAWN BY	DATE
----	M. PAYNE	2–18
COUNTY PROJECT NO.	DESIGNED BY	
----	M. PAYNE	2–18
CITY PROJECT NO.	CHECKED BY	
ST189001.001	M. PAYNE	2–18
	REVIEWED BY	
	J. RENNEBERG	2–18

9+00.00

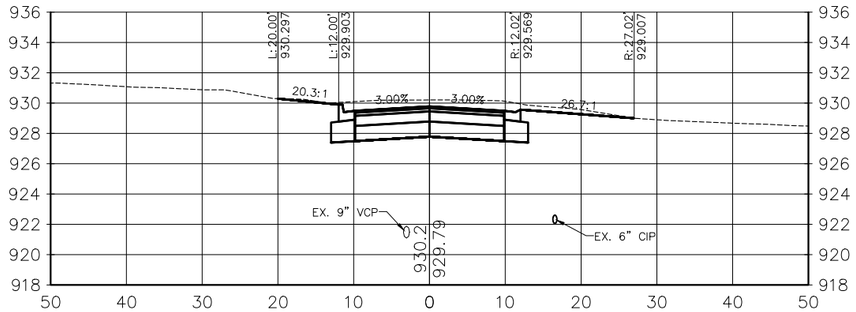

10+00.00

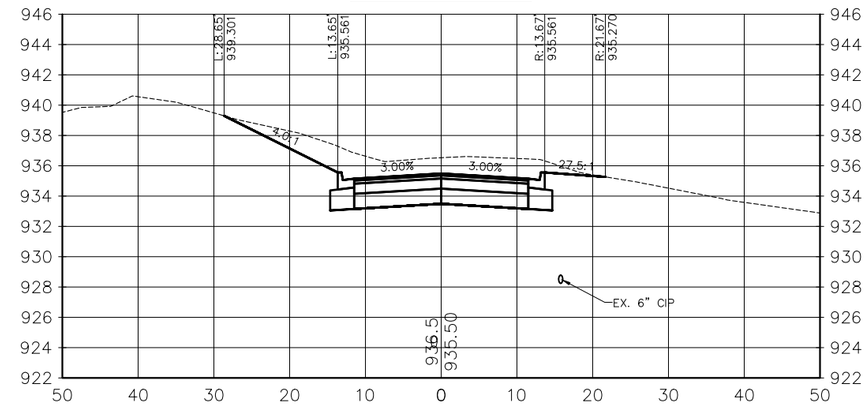

9+35.00

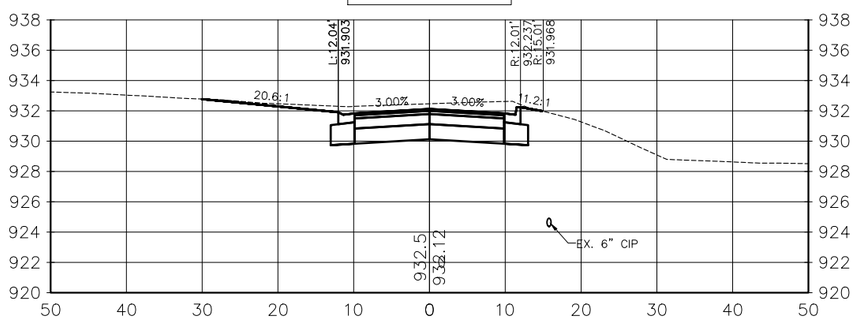

10+40.00

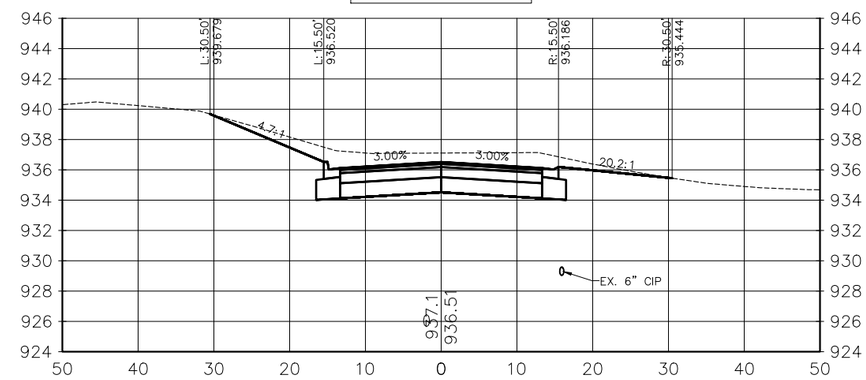

9+50.00

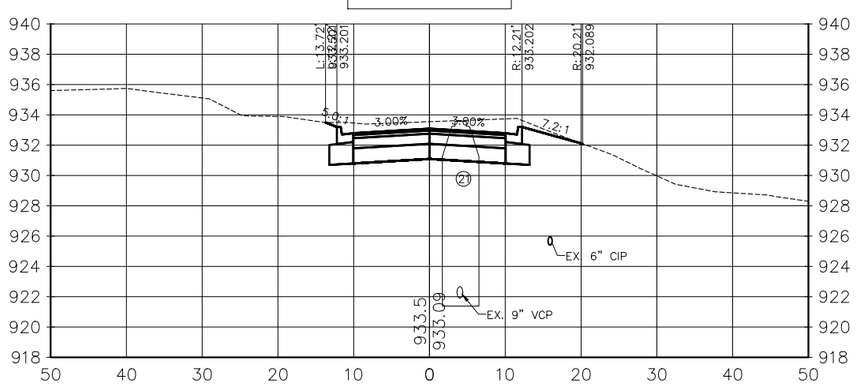

10+50.00

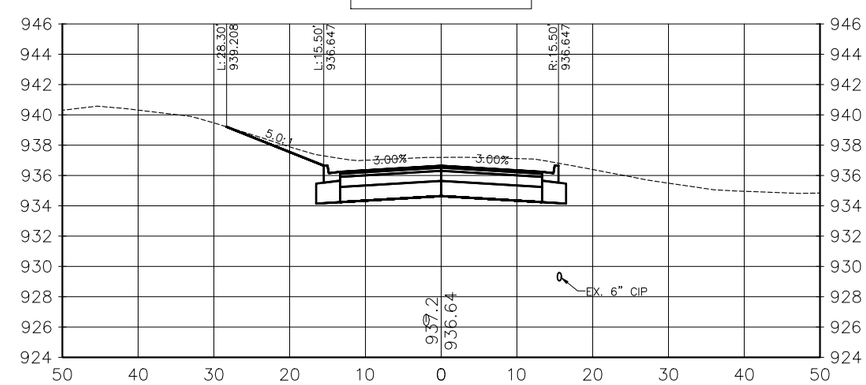

NO	DATE	BY	CKD	APPR	REVISION

I hereby certify that this plan, specification or report was prepared by me or under my direct supervision and that I am a duly Licensed Professional Engineer under the laws of the State of Minnesota.

Signature: MICHAEL J. PAYNE

Date: 3–13–18 License#: 50484

City of Plymouth

PLYMOUTH, MINNESOTA
KILMER PARK STREET
RECONSTRUCTION

CROSS SECTIONS
28TH AVE (EAST)

STATE AID PROJECT NO. ----	DRAWN BY M. PAYNE	DATE 2–18
COUNTY PROJECT NO. ----	DESIGNED BY M. PAYNE	2–18
CITY PROJECT NO. ST189001.001	CHECKED BY M. PAYNE	2–18
	REVIEWED BY J. RENNEBERG	2–18

0+50.00

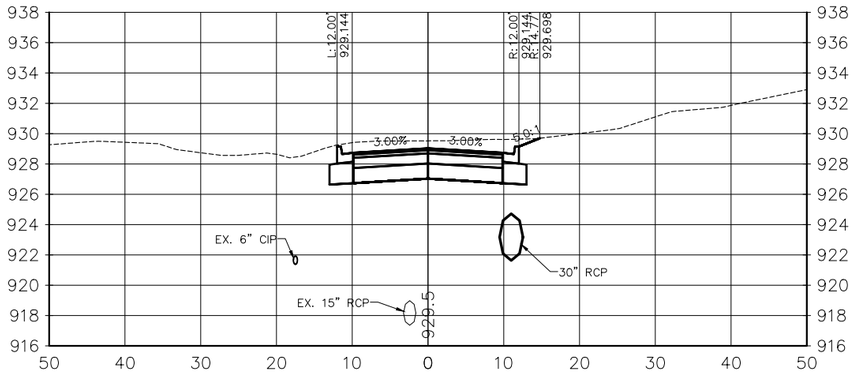

1+00.00

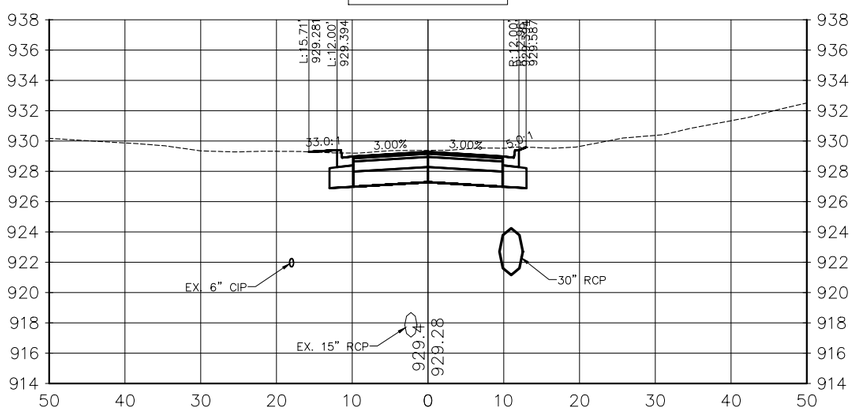

1+50.00

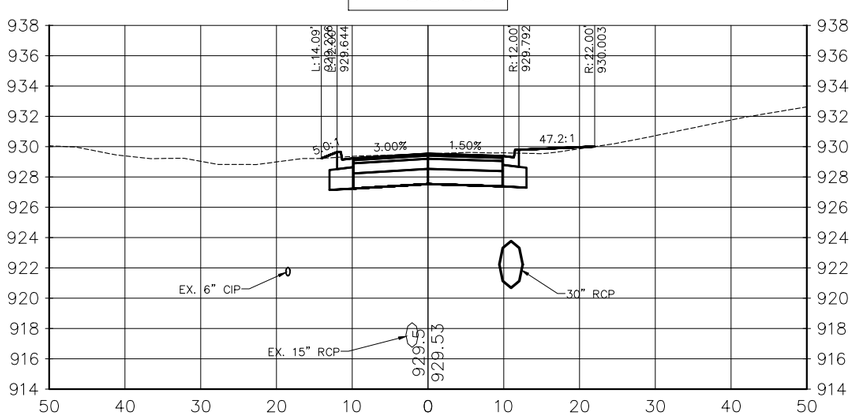

1+80.00

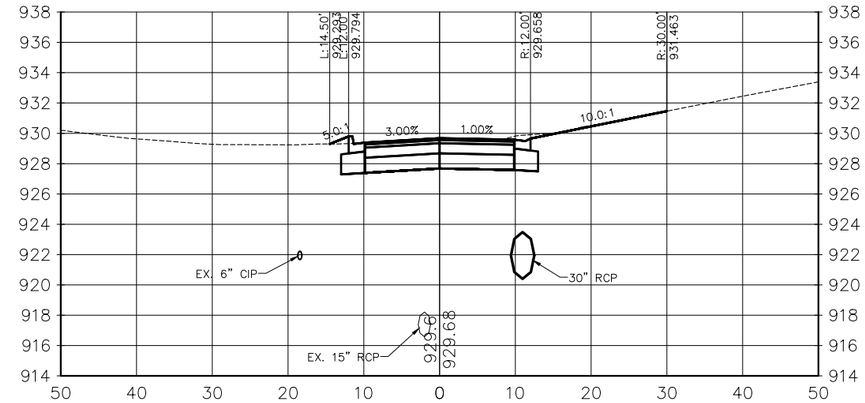

2+00.00

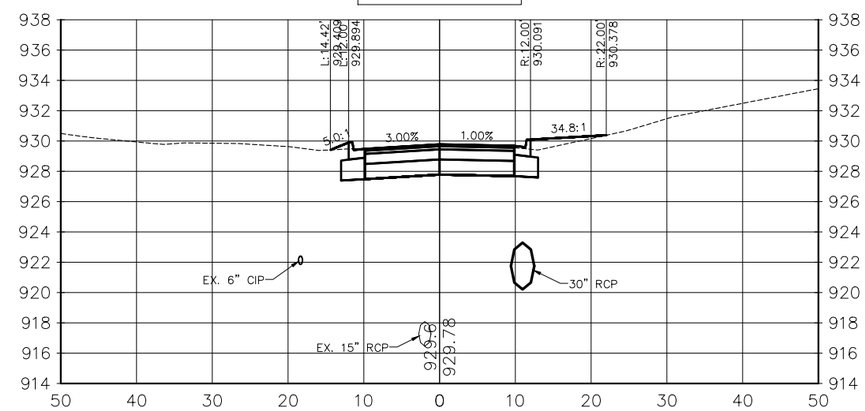

2+25.00

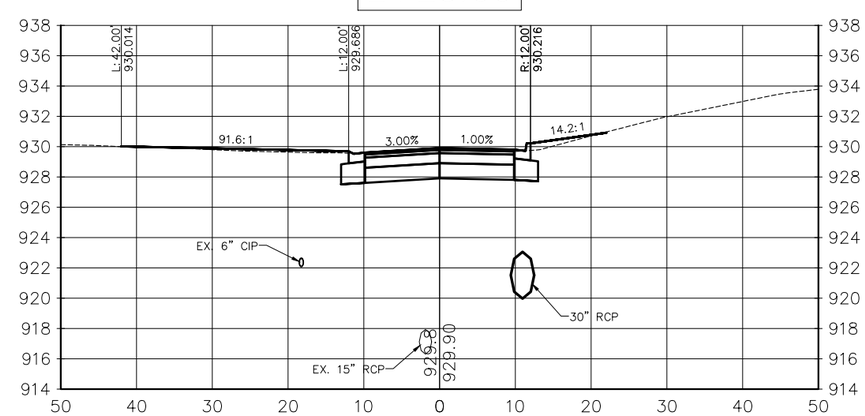

NO	DATE	BY	CKD	APPR	REVISION

I hereby certify that this plan, specification or report was prepared by me or under my direct supervision and that I am a duly Licensed Professional Engineer under the laws of the State of Minnesota.

Signature: MICHAEL J. PAYNE

Date: 3-13-18 License#: 50484

City of Plymouth

PLYMOUTH, MINNESOTA
KILMER PARK STREET
RECONSTRUCTION

CROSS SECTIONS
LANCASTER LANE

STATE AID PROJECT NO.	DRAWN BY	DATE
----	M. PAYNE	2-18
COUNTY PROJECT NO.	DESIGNED BY	
----	M. PAYNE	2-18
	CHECKED BY	
CITY PROJECT NO.	M. PAYNE	2-18
ST189001.001	REVIEWED BY	
	J. RENNEBERG	2-18

2+50.00

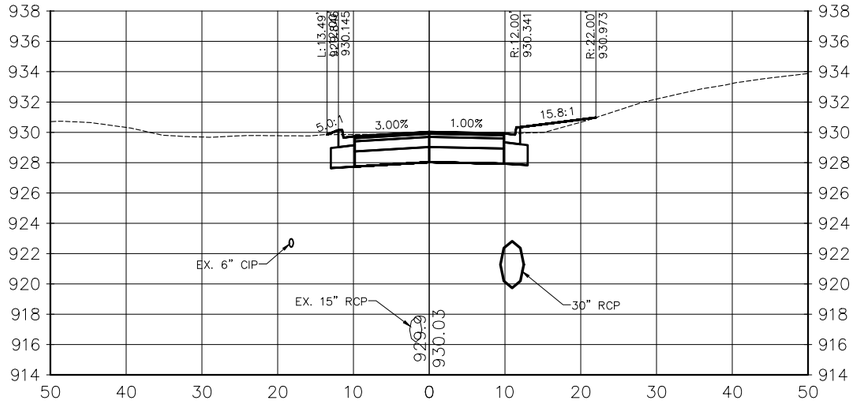

3+40.00

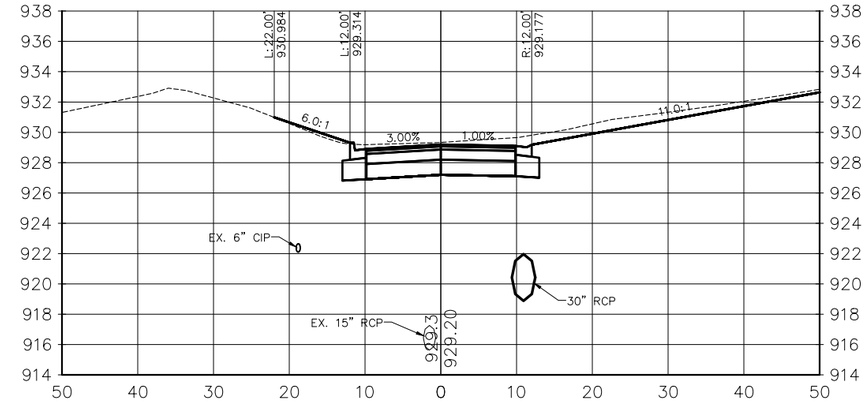

2+75.00

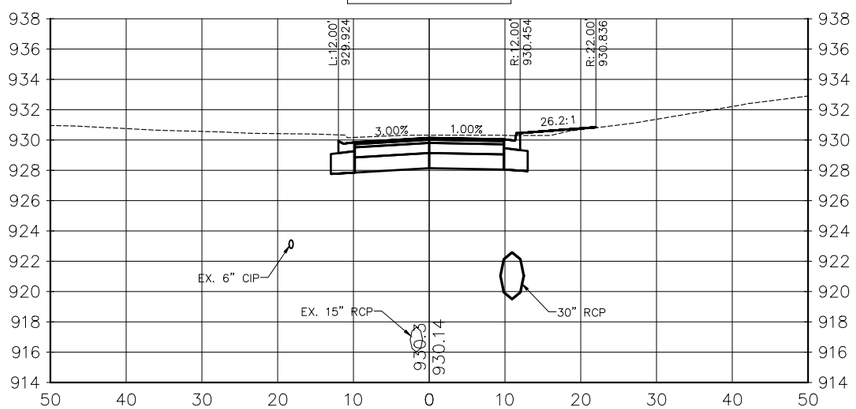

3+50.00

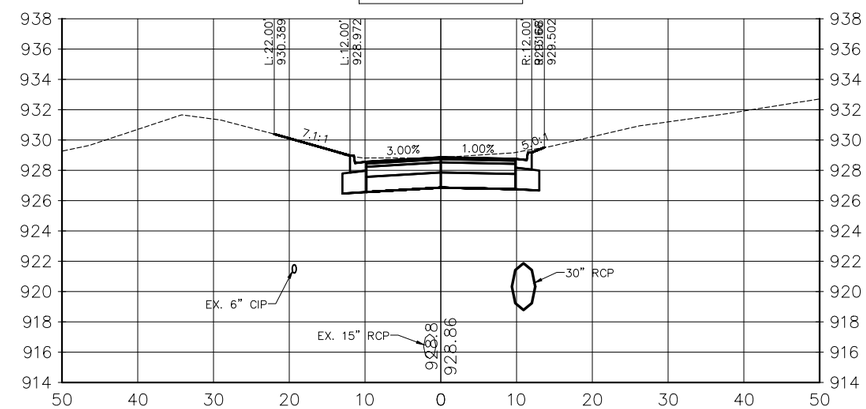

3+00.00

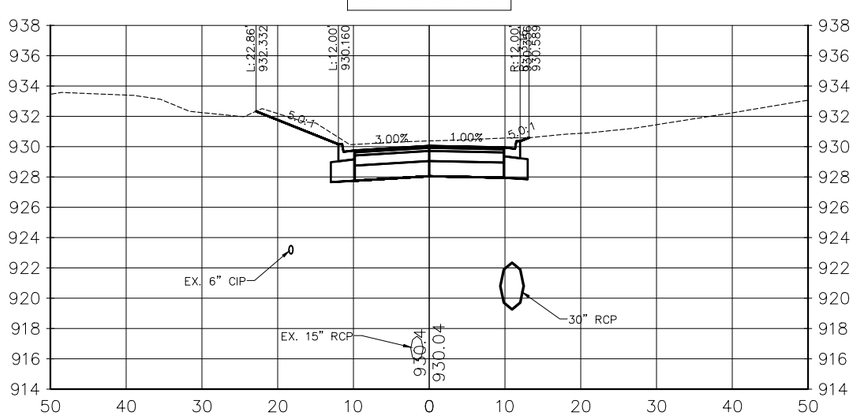

4+00.00

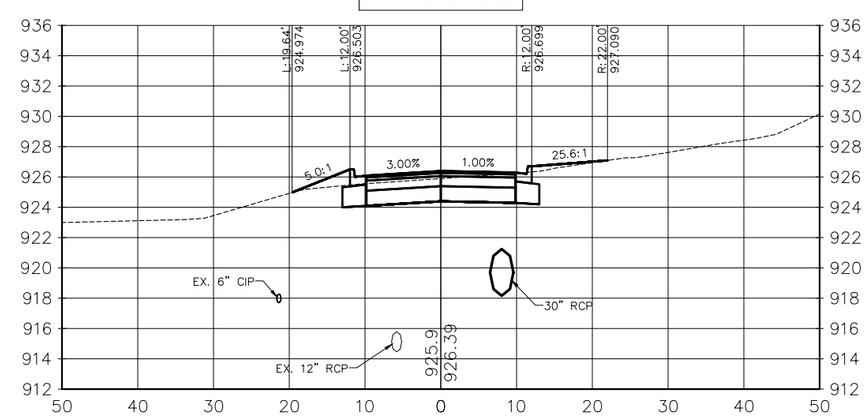

NO	DATE	BY	CKD	APPR	REVISION

I hereby certify that this plan, specification or report was prepared by me or under my direct supervision and that I am a duly Licensed Professional Engineer under the laws of the State of Minnesota.

Signature: MICHAEL J. PAYNE

Date: 3–13–18 License#: 50484

City of Plymouth

PLYMOUTH, MINNESOTA
KILMER PARK STREET
RECONSTRUCTION

CROSS SECTIONS
LANCASTER LANE

STATE AID PROJECT NO.	DRAWN BY	DATE
----	M. PAYNE	2–18
COUNTY PROJECT NO.	DESIGNED BY M. PAYNE	2–18
----	CHECKED BY M. PAYNE	2–18
CITY PROJECT NO. ST189001.001	REVIEWED BY J. RENNEBERG	2–18

4+50.00

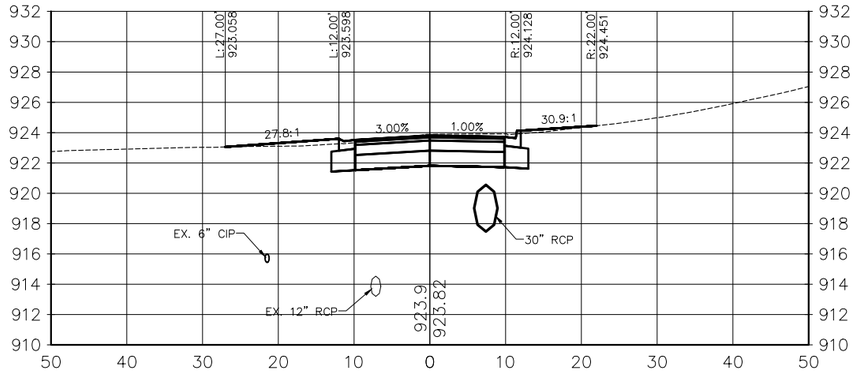

5+15.00

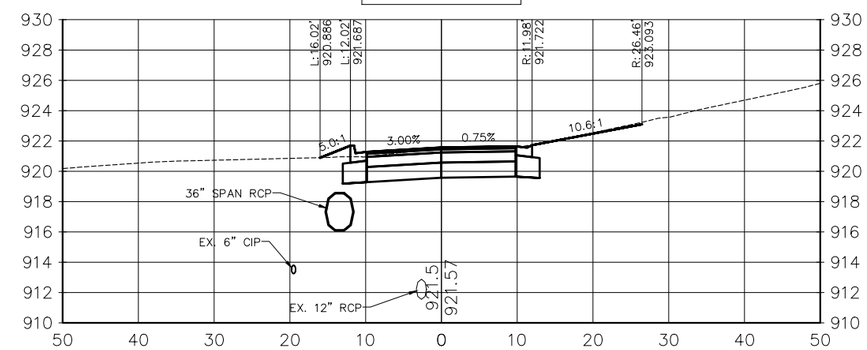

4+60.00

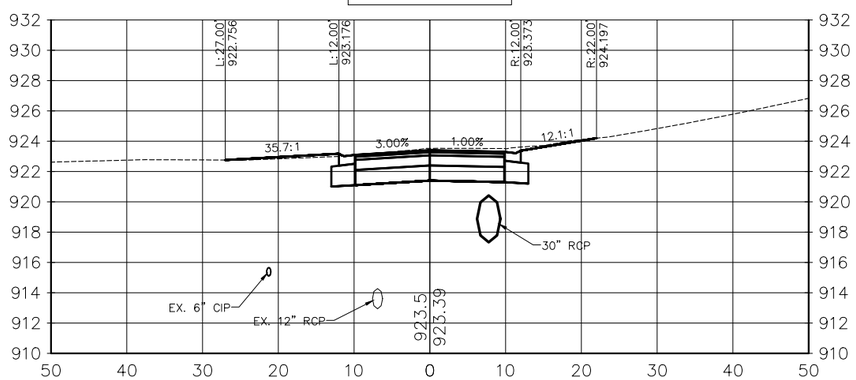

5+50.00

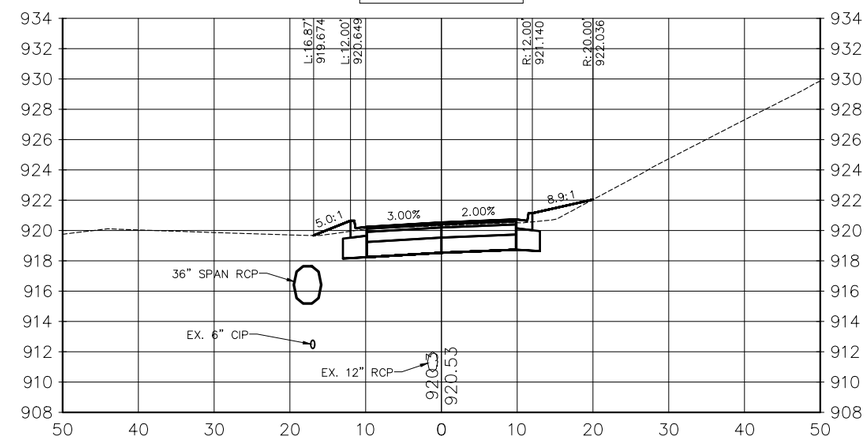

5+00.00

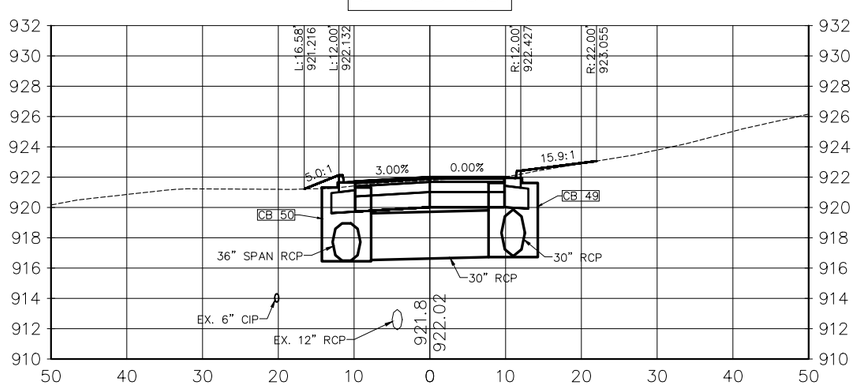

NO	DATE	BY	CKD	APPR	REVISION

I hereby certify that this plan, specification or report was prepared by me or under my direct supervision and that I am a duly Licensed Professional Engineer under the laws of the State of Minnesota.

Signature: MICHAEL J. PAYNE

Date: 3–13–18 License#: 50484

City of Plymouth

PLYMOUTH, MINNESOTA
KILMER PARK STREET
RECONSTRUCTION

CROSS SECTIONS
LANCASTER LANE

STATE AID PROJECT NO.	DRAWN BY	DATE
----	M. PAYNE	2–18
COUNTY PROJECT NO.	DESIGNED BY M. PAYNE	2–18
----	CHECKED BY M. PAYNE	2–18
CITY PROJECT NO. ST189001.001	REVIEWED BY J. RENNEBERG	2–18

6+00.00

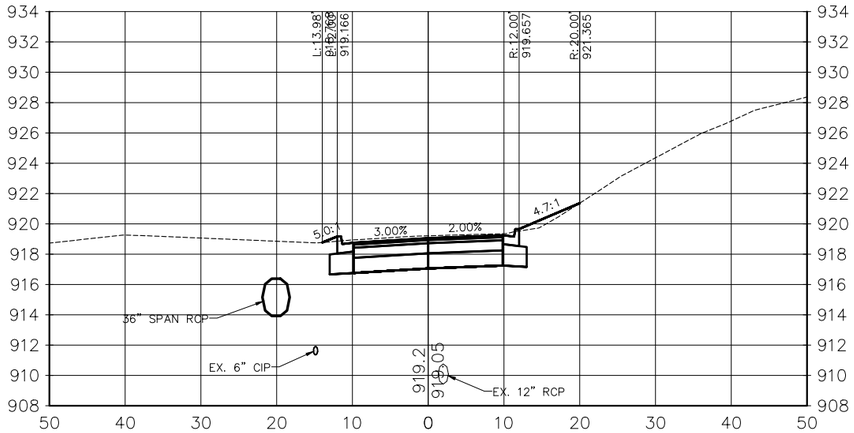

7+00.00

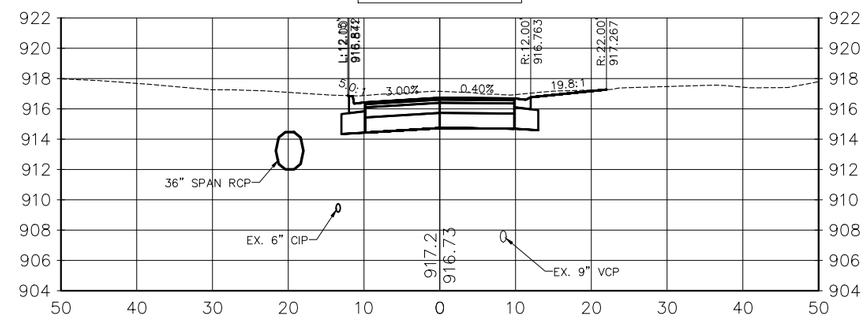

6+50.00

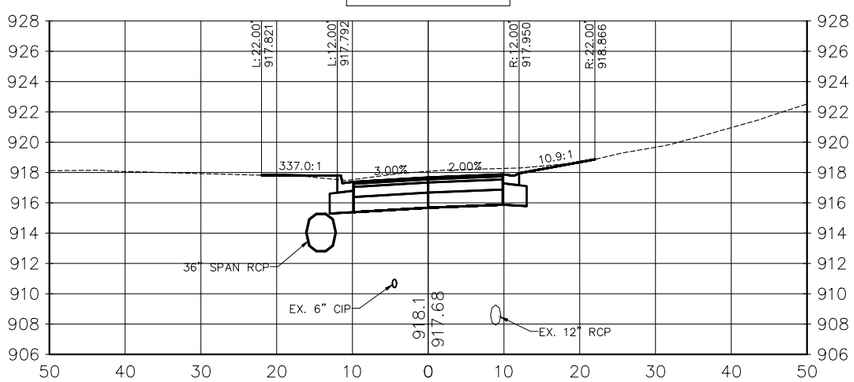

7+10.00

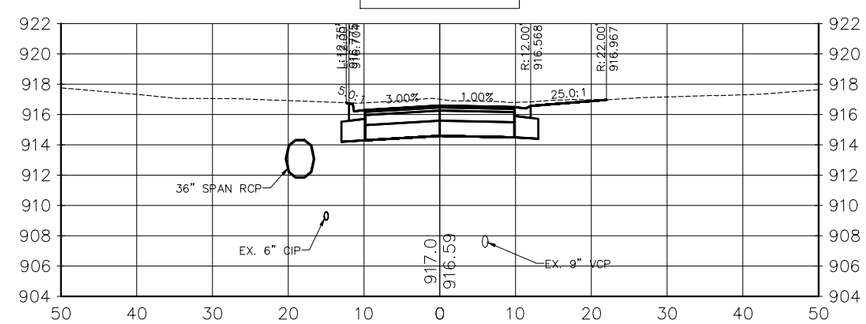

6+82.00

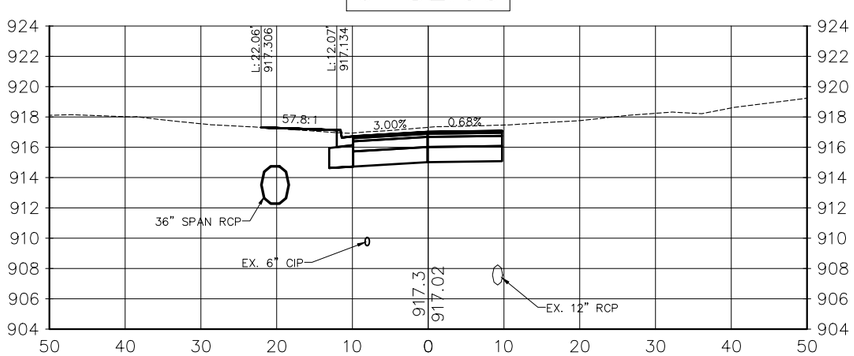

7+50.00

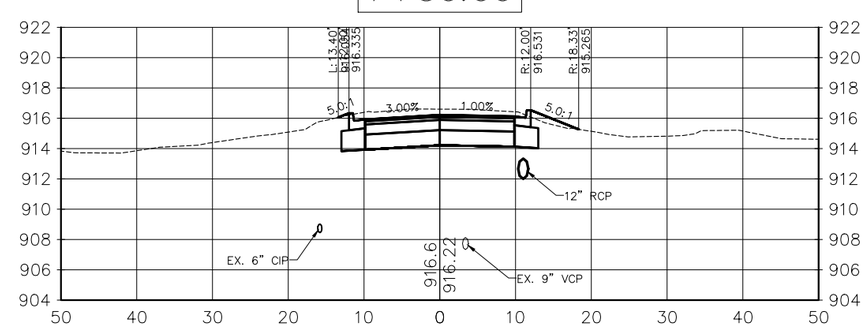

NO	DATE	BY	CKD	APPR	REVISION

I hereby certify that this plan, specification or report was prepared by me or under my direct supervision and that I am a duly Licensed Professional Engineer under the laws of the State of Minnesota.

Signature: MICHAEL J. PAYNE

Date: 3–13–18 License#: 50484

City of Plymouth

PLYMOUTH, MINNESOTA
KILMER PARK STREET
RECONSTRUCTION

CROSS SECTIONS
27TH AVE

STATE AID PROJECT NO. ----	DRAWN BY M. PAYNE	DATE 2–18	SHEET 93 OF 106
COUNTY PROJECT NO. ----	DESIGNED BY M. PAYNE	2–18	
	CHECKED BY M. PAYNE	2–18	
CITY PROJECT NO. ST189001.001	REVIEWED BY J. RENNEBERG	2–18	

8+00.00

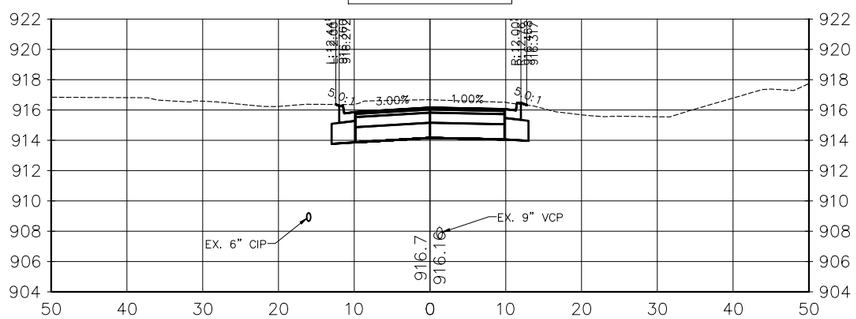

9+00.00

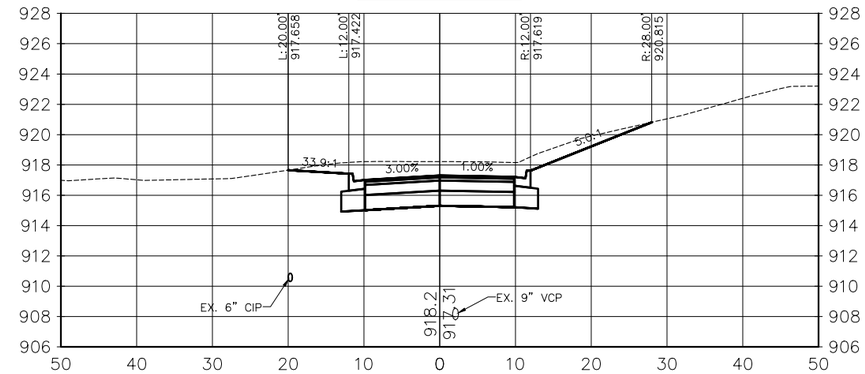

8+23.00

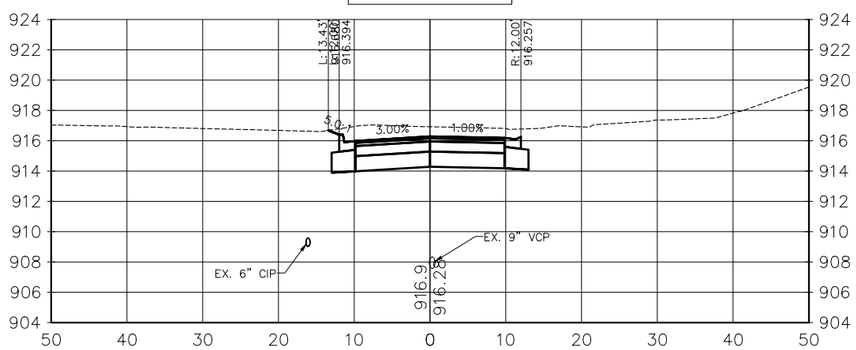

9+50.00

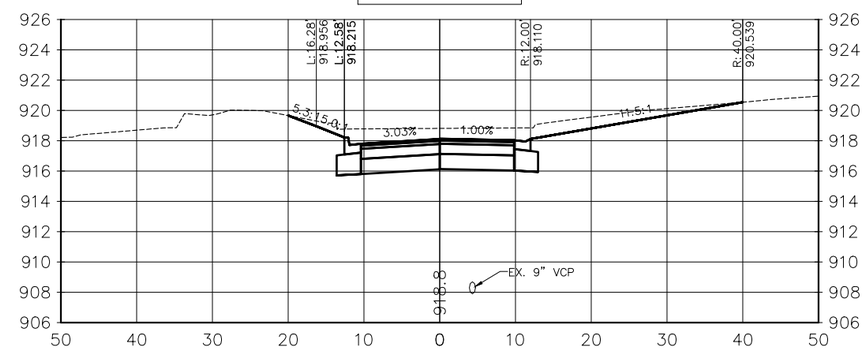

8+50.00

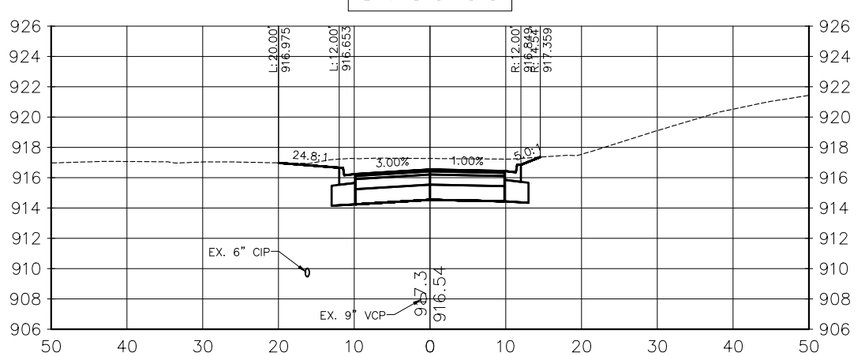

10+00.00

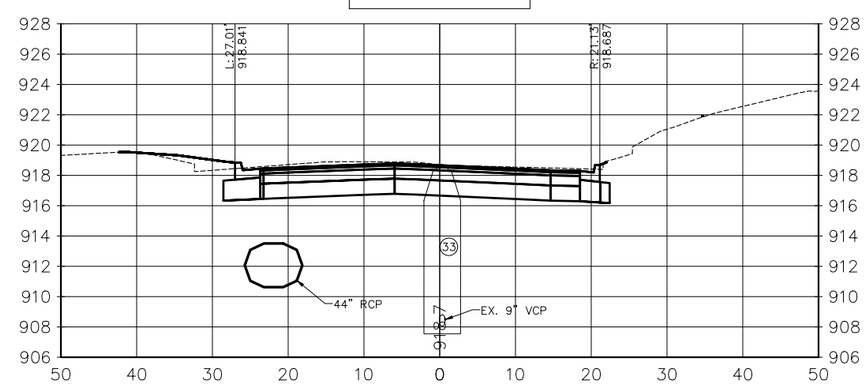

NO	DATE	BY	CKD	APPR	REVISION

I hereby certify that this plan, specification or report was prepared by me or under my direct supervision and that I am a duly Licensed Professional Engineer under the laws of the State of Minnesota.

Signature: MICHAEL J. PAYNE

Date: 3-13-18 License#: 50484

City of Plymouth

PLYMOUTH, MINNESOTA
KILMER PARK STREET
RECONSTRUCTION

CROSS SECTIONS

27TH AVE

STATE AID PROJECT NO.	DRAWN BY	DATE
----	M. PAYNE	2-18
COUNTY PROJECT NO.	DESIGNED BY	
----	M. PAYNE	2-18
	CHECKED BY	
	M. PAYNE	2-18
CITY PROJECT NO.	REVIEWED BY	
ST189001.001	J. RENNEBERG	2-18

10+50.00

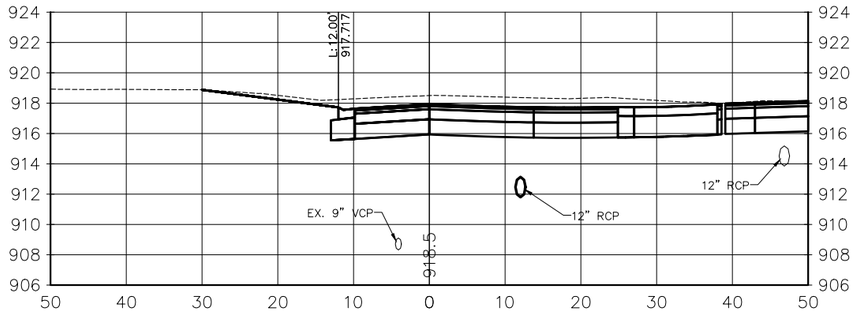

12+00.00

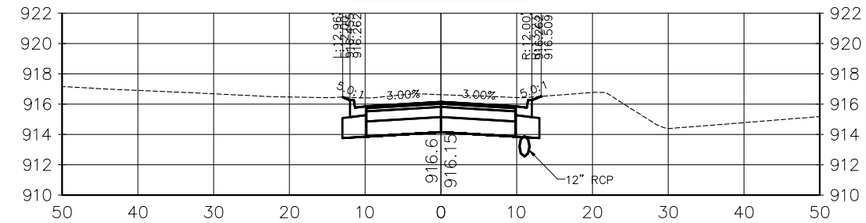

11+00.00

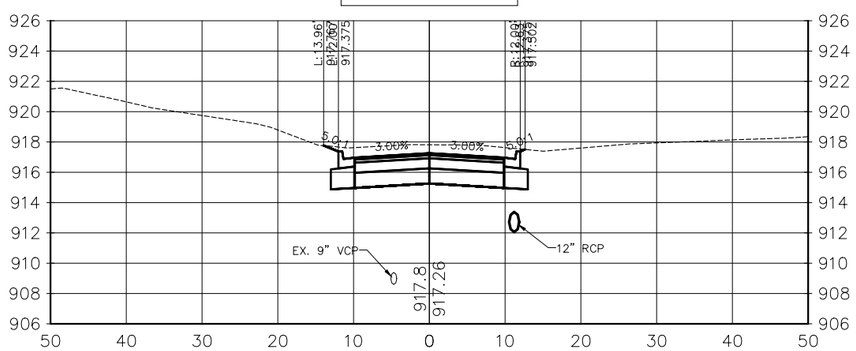

11+50.00

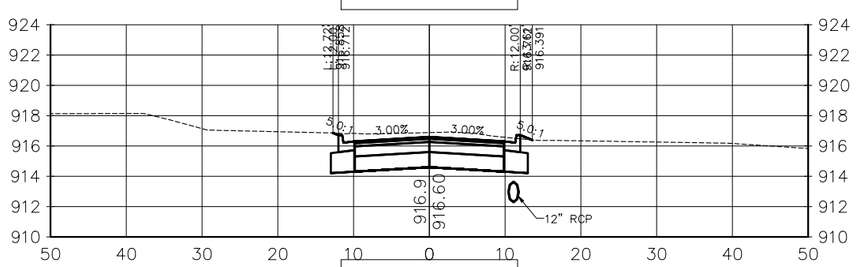

11+60.00

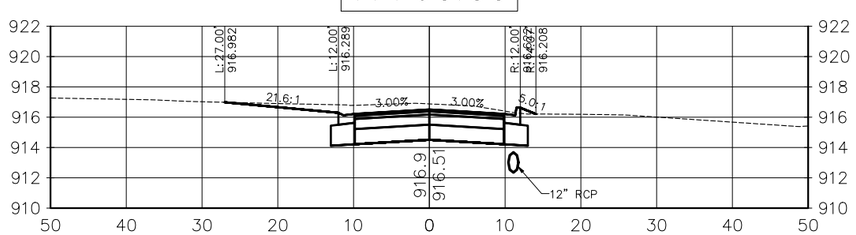

NO	DATE	BY	CKD	APPR	REVISION

I hereby certify that this plan, specification or report was prepared by me or under my direct supervision and that I am a duly Licensed Professional Engineer under the laws of the State of Minnesota.

Signature: MICHAEL J. PAYNE

Date: 3–13–18 License#: 50484

City of Plymouth

PLYMOUTH, MINNESOTA
KILMER PARK STREET
RECONSTRUCTION

CROSS SECTIONS

27TH AVE

STATE AID PROJECT NO.	DRAWN BY	DATE
----	M. PAYNE	2–18
COUNTY PROJECT NO.	DESIGNED BY	
----	M. PAYNE	2–18
CITY PROJECT NO.	CHECKED BY	
ST189001.001	M. PAYNE	2–18
	REVIEWED BY	
	J. RENNEBERG	2–18

0+50.00

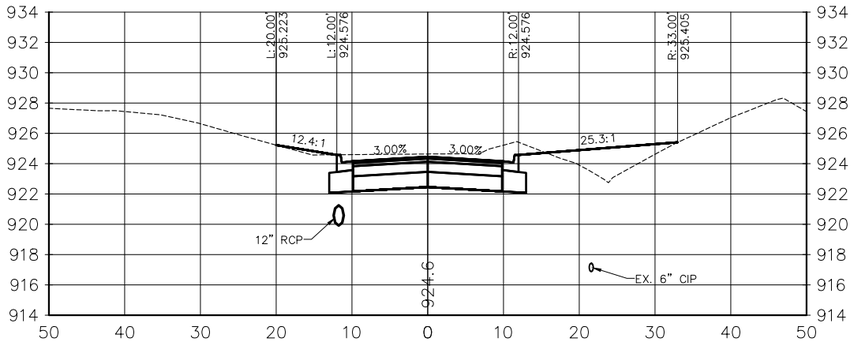

1+40.00

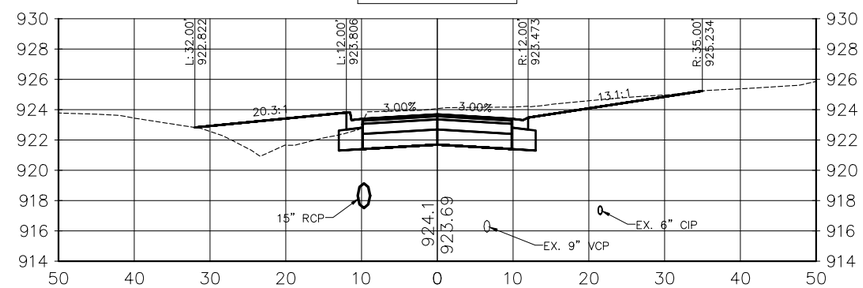

0+80.00

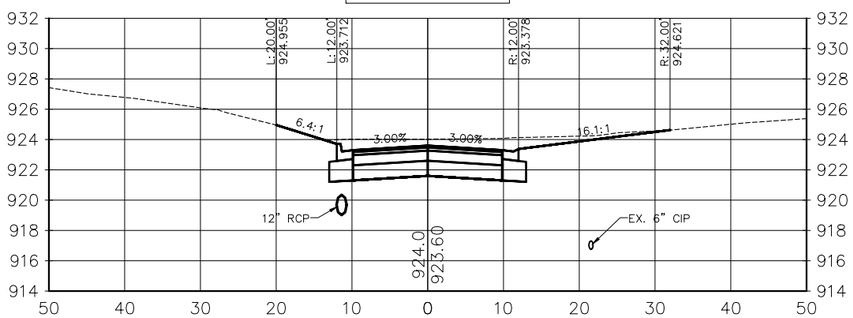

1+50.00

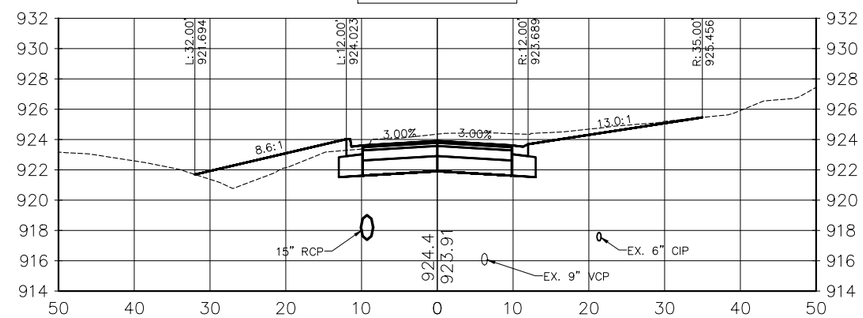

1+00.00

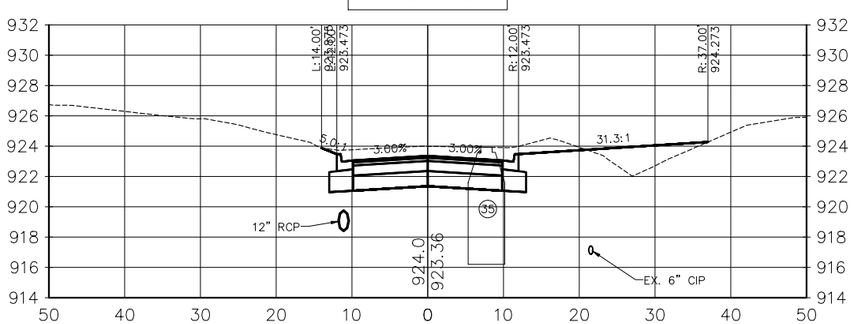

2+00.00

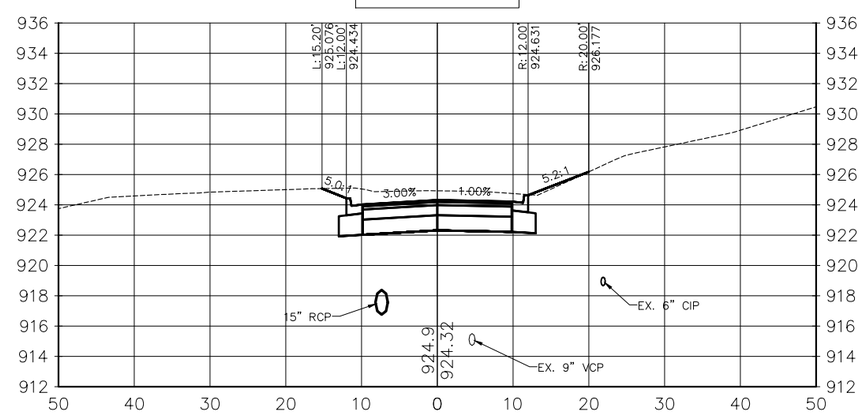

NO	DATE	BY	CKD	APPR	REVISION

I hereby certify that this plan, specification or report was prepared by me or under my direct supervision and that I am a duly Licensed Professional Engineer under the laws of the State of Minnesota.

Signature: MICHAEL J. PAYNE

Date: 3-13-18 License#: 50484

City of Plymouth

PLYMOUTH, MINNESOTA
KILMER PARK STREET
RECONSTRUCTION

CROSS SECTIONS
KILMER LANE

STATE AID PROJECT NO. ----	DRAWN BY M. PAYNE	DATE 2-18
COUNTY PROJECT NO. ----	DESIGNED BY M. PAYNE	2-18
CITY PROJECT NO. ST189001.001	CHECKED BY M. PAYNE	2-18
	REVIEWED BY J. RENNEBERG	2-18

2+50.00

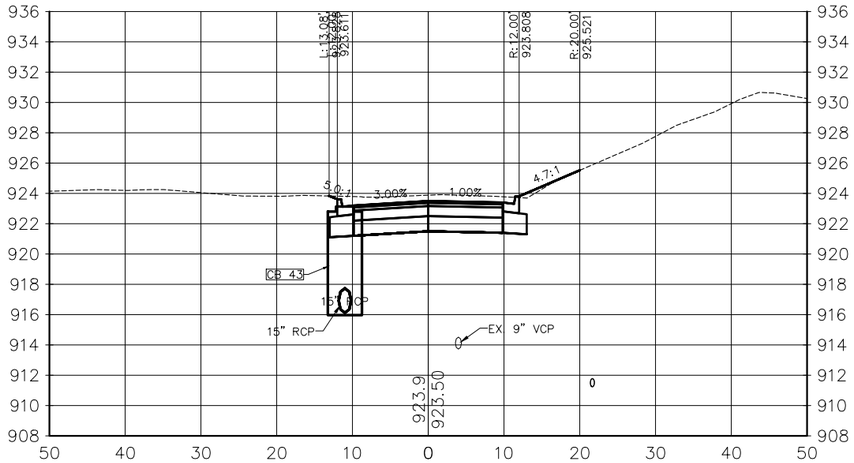

3+50.00

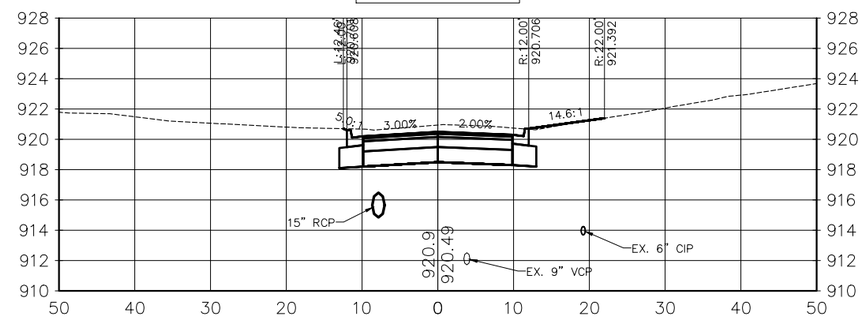

3+00.00

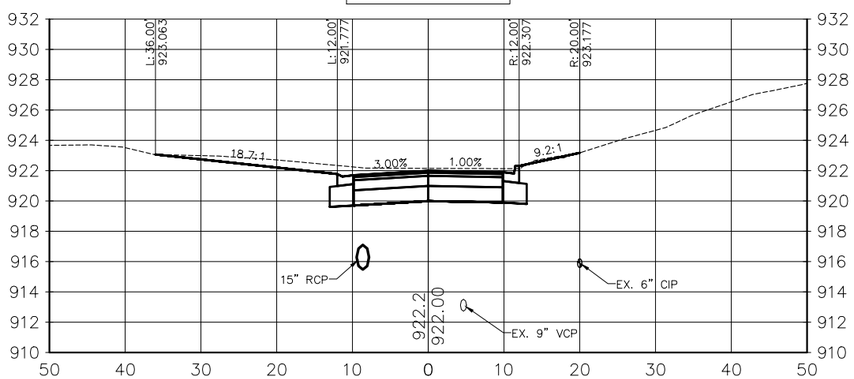

3+90.00

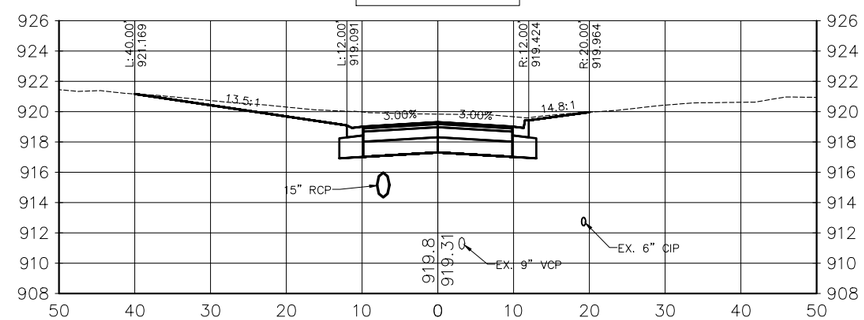

3+20.00

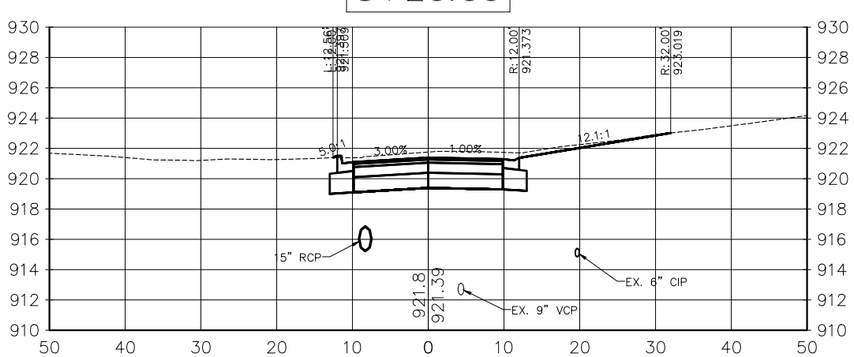

4+00.00

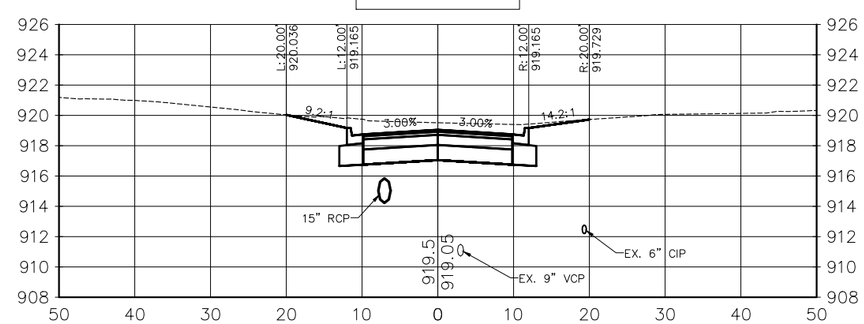

NO	DATE	BY	CKD	APPR	REVISION

I hereby certify that this plan, specification or report was prepared by me or under my direct supervision and that I am a duly Licensed Professional Engineer under the laws of the State of Minnesota.

Signature: MICHAEL J. PAYNE

Date: 3-13-18 License#: 50484

City of Plymouth

PLYMOUTH, MINNESOTA
KILMER PARK STREET
RECONSTRUCTION

CROSS SECTIONS
KILMER LANE

STATE AID PROJECT NO.	DRAWN BY	DATE
----	M. PAYNE	2-18
COUNTY PROJECT NO.	DESIGNED BY M. PAYNE	2-18
----	CHECKED BY M. PAYNE	2-18
CITY PROJECT NO. ST189001.001	REVIEWED BY J. RENNEBERG	2-18

4+50.00

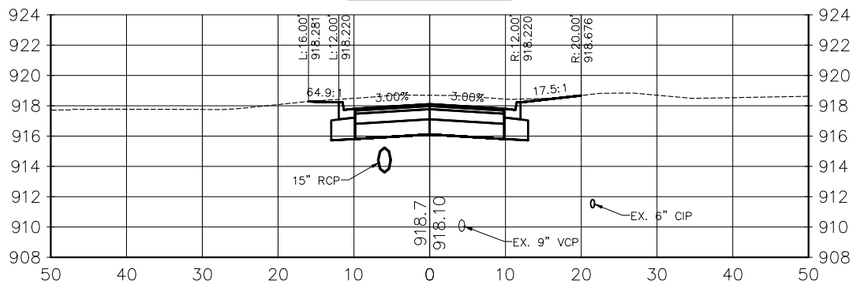

5+00.00

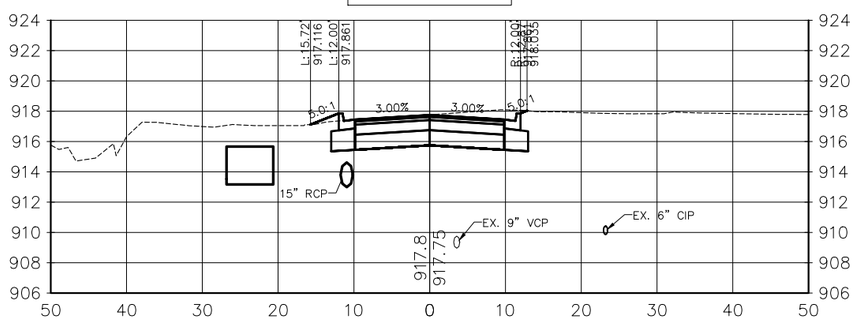

5+50.00

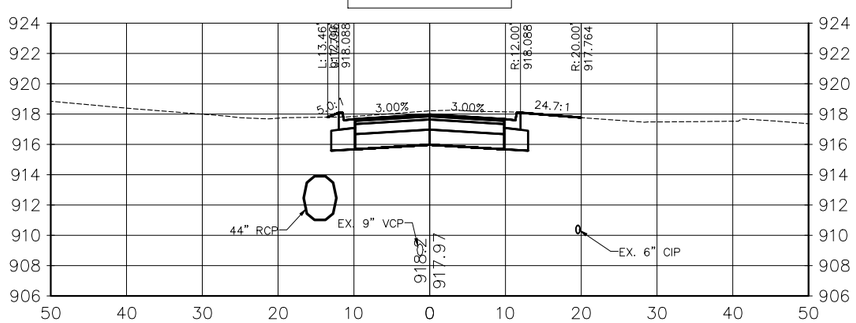

6+00.00

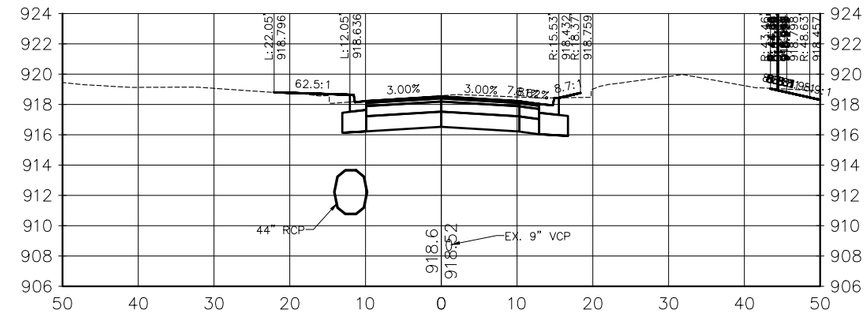

6+50.00

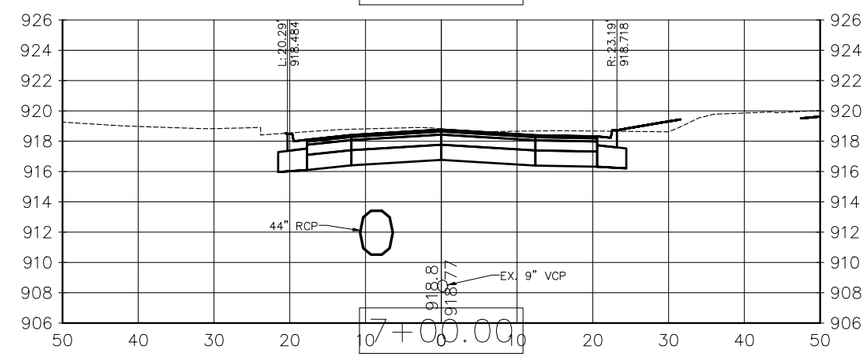

7+00.00

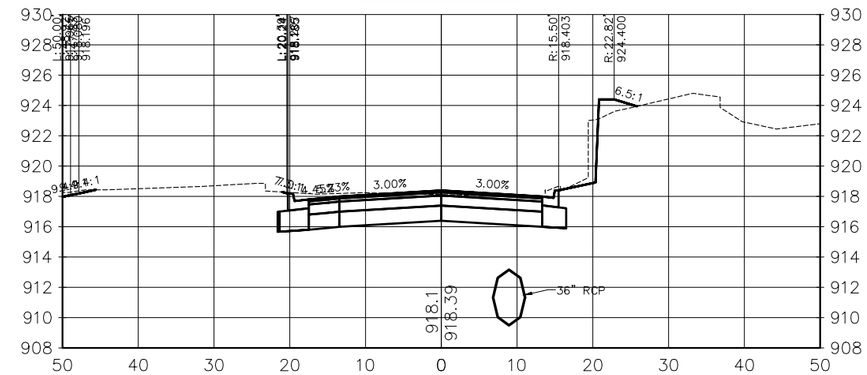

NO	DATE	BY	CKD	APPR	REVISION

I hereby certify that this plan, specification or report was prepared by me or under my direct supervision and that I am a duly Licensed Professional Engineer under the laws of the State of Minnesota.

Signature: MICHAEL J. PAYNE

Date: 3-13-18 License#: 50484

City of Plymouth

PLYMOUTH, MINNESOTA
KILMER PARK STREET
RECONSTRUCTION

CROSS SECTIONS
KILMER LANE

STATE AID PROJECT NO. ----	DRAWN BY M. PAYNE	DATE 2-18
COUNTY PROJECT NO. ----	DESIGNED BY M. PAYNE	2-18
CITY PROJECT NO. ST189001.001	CHECKED BY M. PAYNE	2-18
	REVIEWED BY J. RENNEBERG	2-18

0+25.00

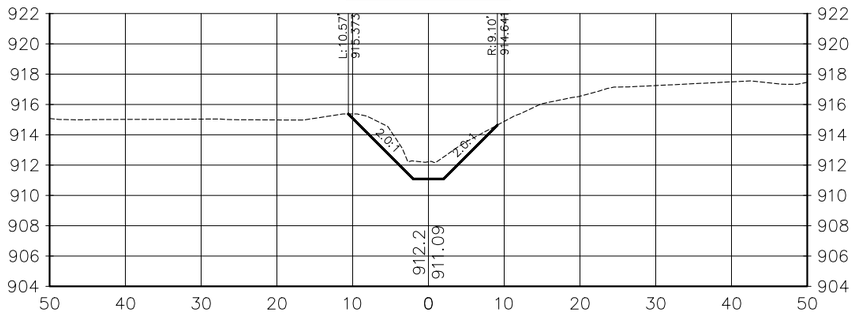

1+00.00

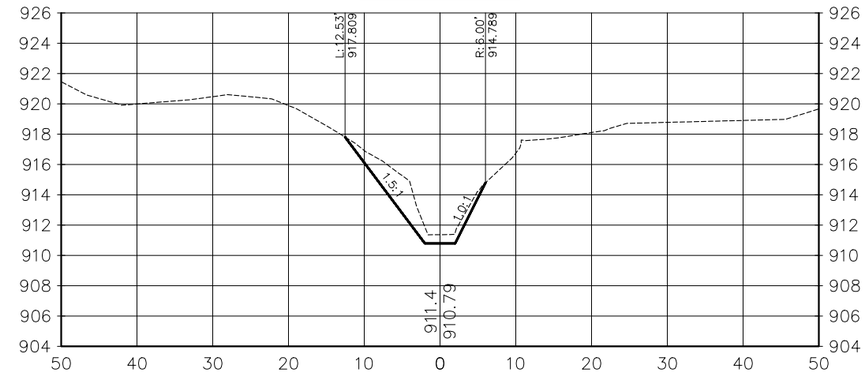

0+50.00

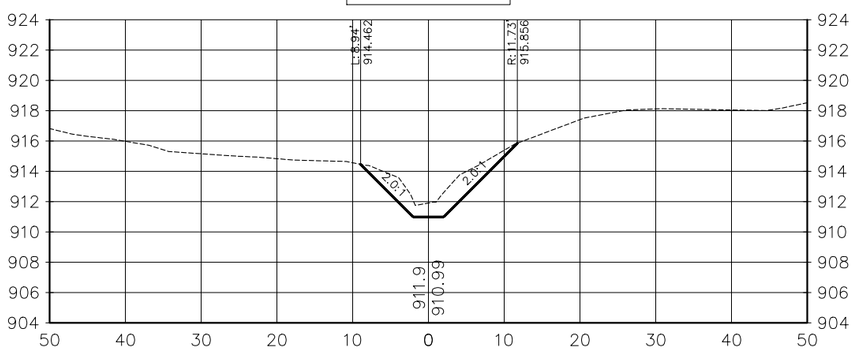

1+25.00

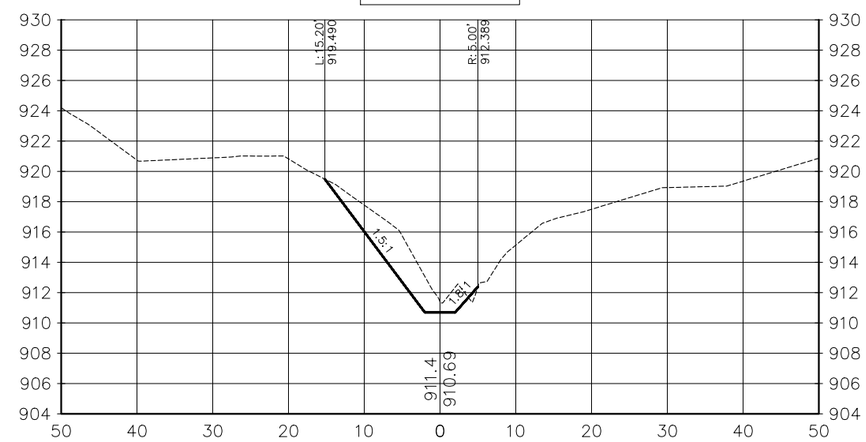

0+75.00

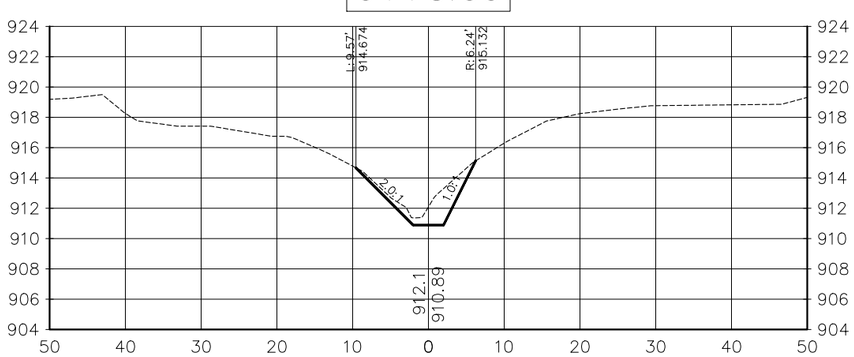

1+50.00

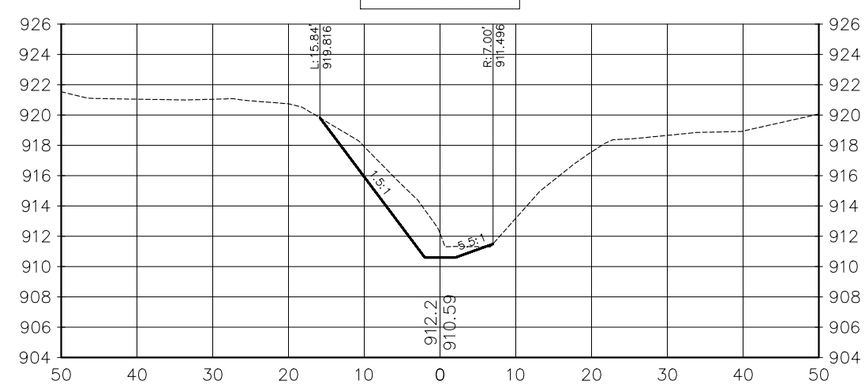

NO	DATE	BY	CKD	APPR	REVISION

I hereby certify that this plan, specification or report was prepared by me or under my direct supervision and that I am a duly Licensed Professional Engineer under the laws of the State of Minnesota.

Signature: MICHAEL J. PAYNE

Date: 3-13-18 License#: 50484

City of Plymouth

PLYMOUTH, MINNESOTA
KILMER PARK STREET
RECONSTRUCTION

CROSS SECTIONS
SOUTH DITCH

STATE AID PROJECT NO.	DRAWN BY	DATE
----	M. PAYNE	2-18
COUNTY PROJECT NO.	DESIGNED BY M. PAYNE	2-18
----	CHECKED BY M. PAYNE	2-18
CITY PROJECT NO. ST189001.001	REVIEWED BY J. RENNEBERG	2-18

1+75.00

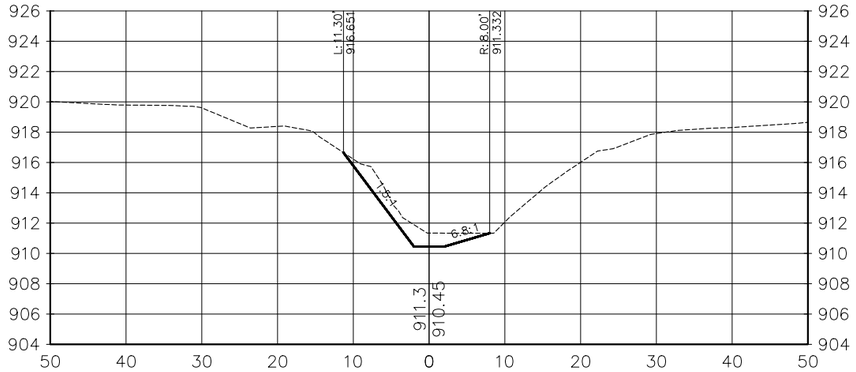

2+50.00

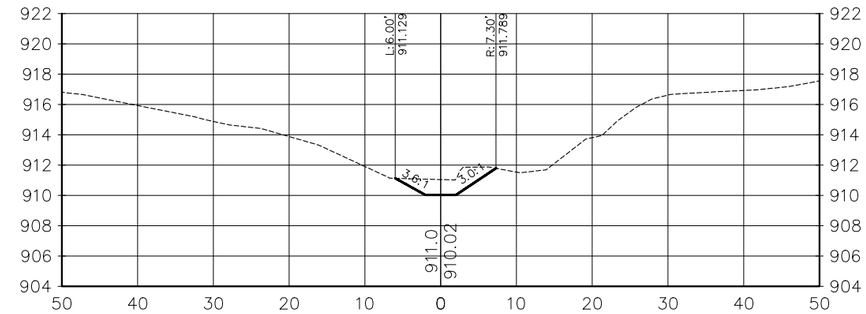

2+00.00

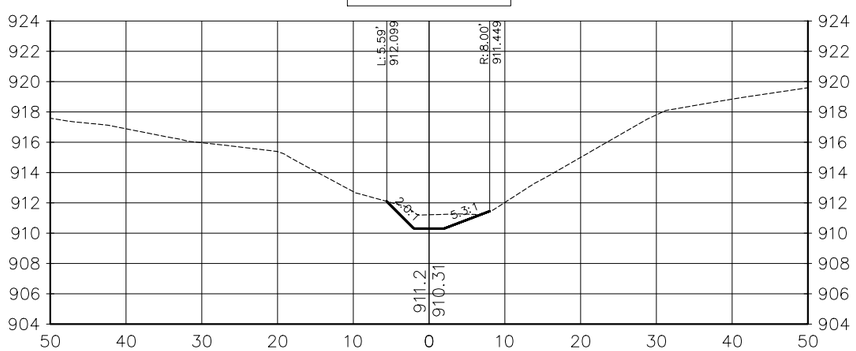

2+75.00

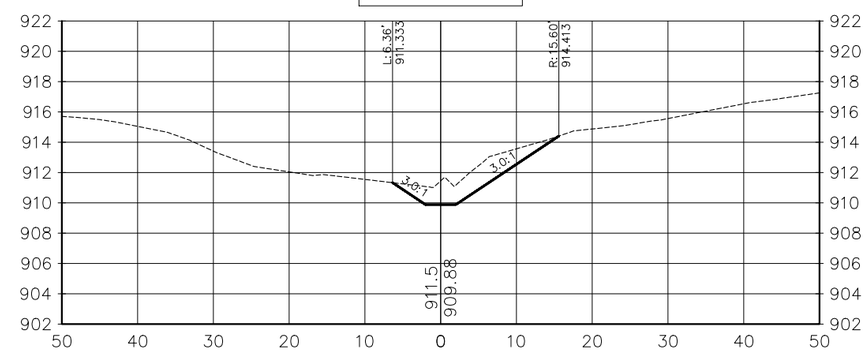

2+25.00

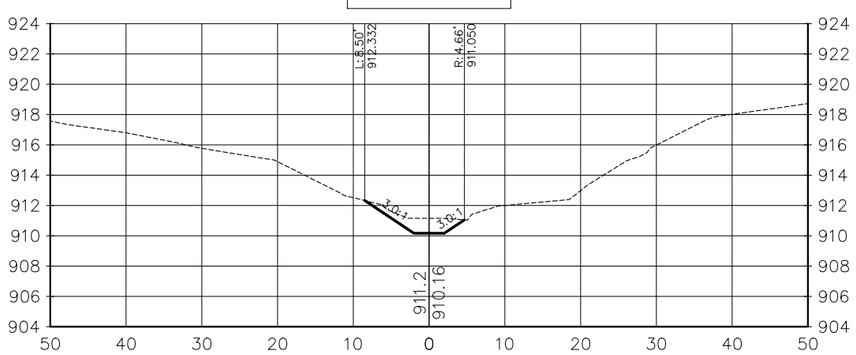

3+00.00

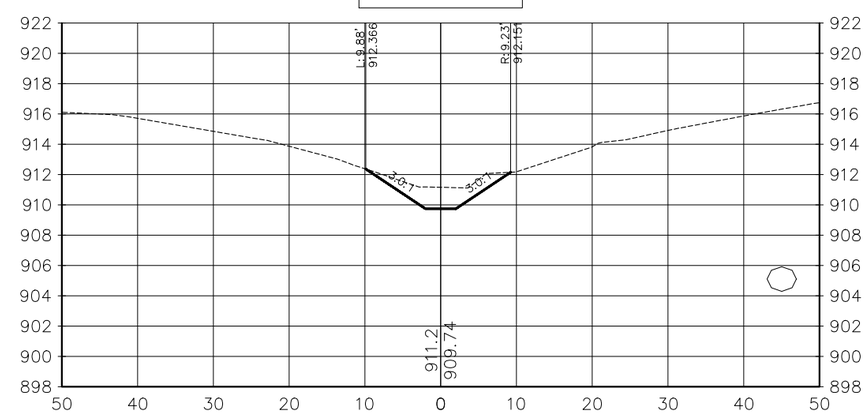

NO	DATE	BY	CKD	APPR	REVISION

I hereby certify that this plan, specification or report was prepared by me or under my direct supervision and that I am a duly Licensed Professional Engineer under the laws of the State of Minnesota.

Signature: MICHAEL J. PAYNE

Date: 3–13–18 License#: 50484

City of Plymouth

PLYMOUTH, MINNESOTA
KILMER PARK STREET
RECONSTRUCTION

CROSS SECTIONS
SOUTH DITCH

STATE AID PROJECT NO.	DRAWN BY	DATE
----	M. PAYNE	2–18
COUNTY PROJECT NO.	DESIGNED BY	
----	M. PAYNE	2–18
CITY PROJECT NO.	CHECKED BY	
ST189001.001	M. PAYNE	2–18
	REVIEWED BY	
	J. RENNEBERG	2–18

3+25.00

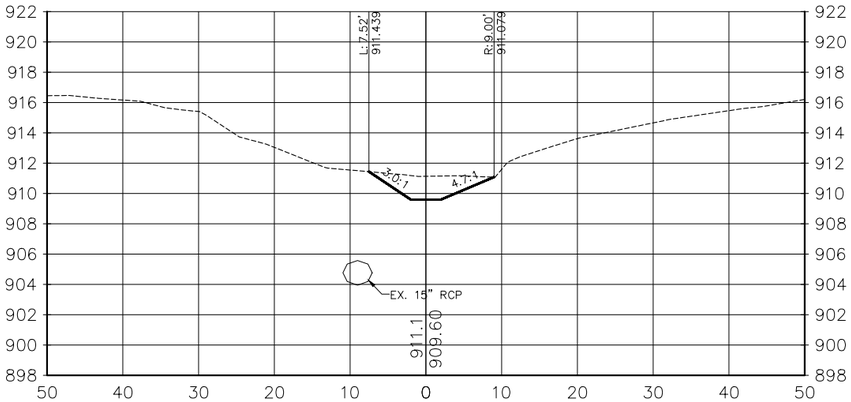

3+50.00

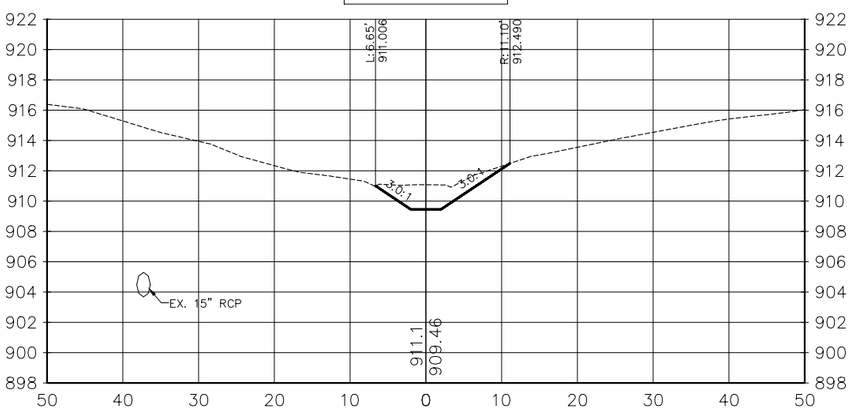

3+75.00

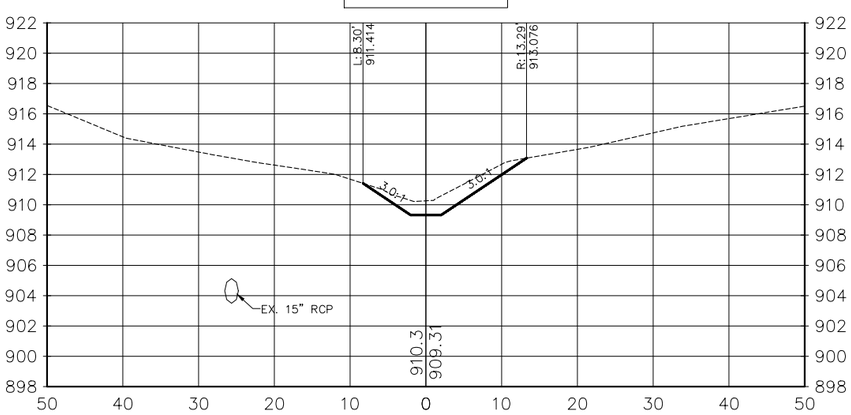

NO	DATE	BY	CKD	APPR	REVISION

I hereby certify that this plan, specification or report was prepared by me or under my direct supervision and that I am a duly Licensed Professional Engineer under the laws of the State of Minnesota.

Signature: MICHAEL J. PAYNE

Date: 3-13-18 License#: 50484

City of Plymouth

PLYMOUTH, MINNESOTA
KILMER PARK STREET
RECONSTRUCTION

CROSS SECTIONS
SOUTH DITCH

STATE AID PROJECT NO.	DRAWN BY	DATE
----	M. PAYNE	2-18
COUNTY PROJECT NO.	DESIGNED BY M. PAYNE	2-18
----	CHECKED BY M. PAYNE	2-18
CITY PROJECT NO. ST189001.001	REVIEWED BY J. RENNEBERG	2-18

SHEET 101 OF 106

0+25.00

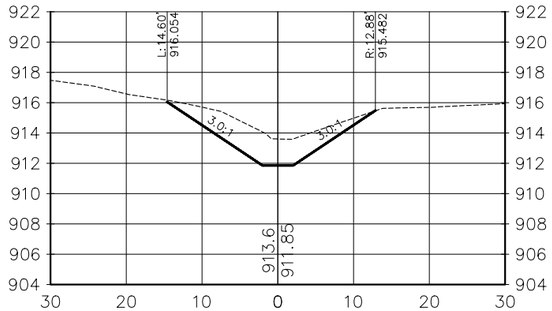

1+00.00

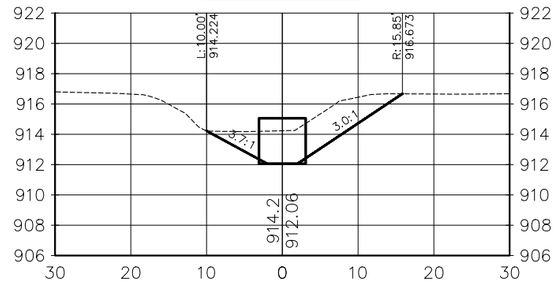

1+75.00

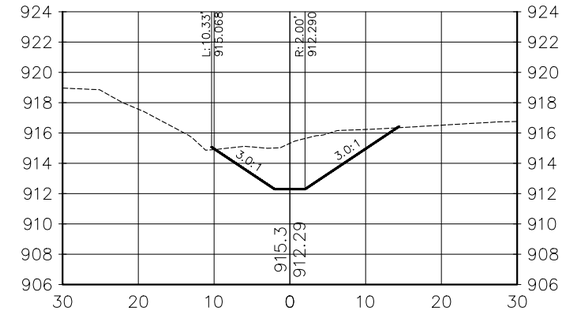

0+50.00

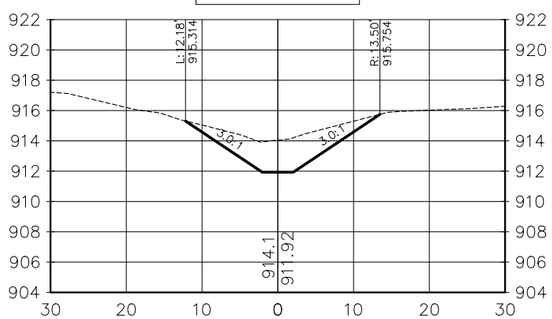

1+25.00

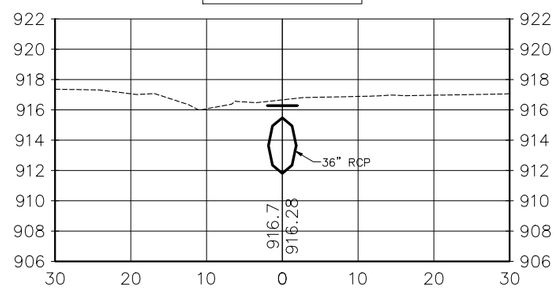

2+00.00

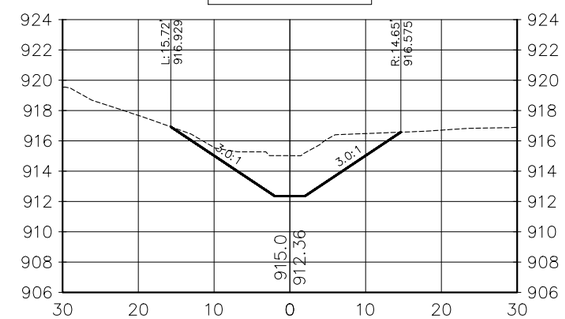

0+75.00

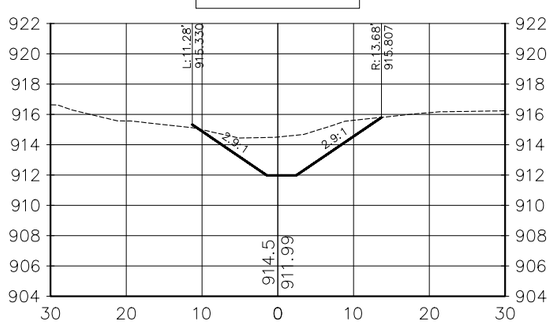

1+50.00

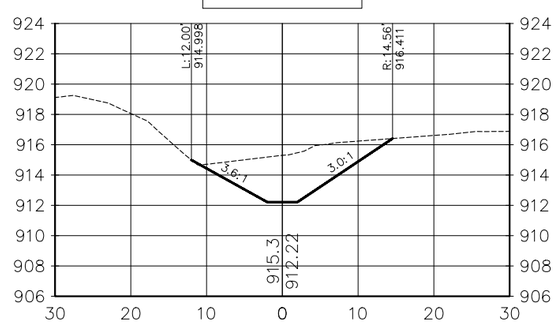

2+25.00

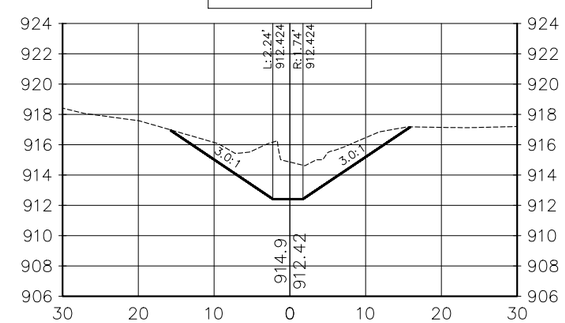

NO	DATE	BY	CKD	APPR	REVISION

I hereby certify that this plan, specification or report was prepared by me or under my direct supervision and that I am a duly Licensed Professional Engineer under the laws of the State of Minnesota.

Signature: MICHAEL J. PAYNE

Date: 3-13-18 License#: 50484

City of Plymouth

PLYMOUTH, MINNESOTA
KILMER PARK STREET
RECONSTRUCTION

CROSS SECTIONS
PARK DITCH

STATE AID PROJECT NO.	DRAWN BY	DATE
----	M. PAYNE	2-18
COUNTY PROJECT NO.	DESIGNED BY	
----	M. PAYNE	2-18
	CHECKED BY	
CITY PROJECT NO.	M. PAYNE	2-18
ST189001.001	REVIEWED BY	
	J. RENNEBERG	2-18

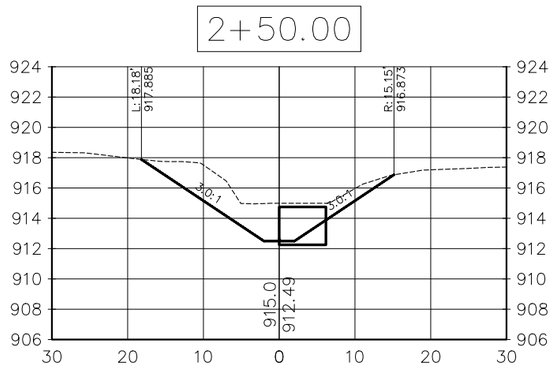

NO	DATE	BY	CKD	APPR	REVISION

I hereby certify that this plan, specification or report was prepared by me or under my direct supervision and that I am a duly Licensed Professional Engineer under the laws of the State of Minnesota.

Signature: MICHAEL J. PAYNE

Date: 3-13-18 License#: 50484

City of Plymouth

PLYMOUTH, MINNESOTA
KILMER PARK STREET RECONSTRUCTION

CROSS SECTIONS
PARK DITCH

STATE AID PROJECT NO. ----	DRAWN BY M. PAYNE	DATE 2-18
COUNTY PROJECT NO. ----	DESIGNED BY M. PAYNE	2-18
CITY PROJECT NO. ST189001.001	CHECKED BY M. PAYNE	2-18
	REVIEWED BY J. RENNEBERG	2-18

SHEET 103 OF 106

0+25.00

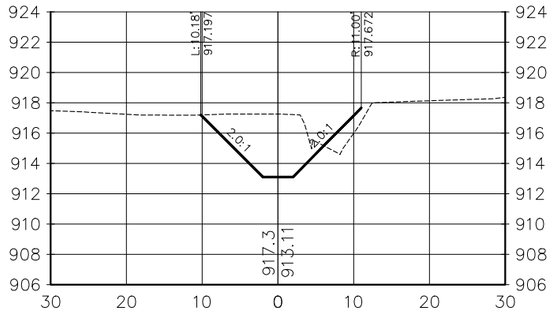

1+00.00

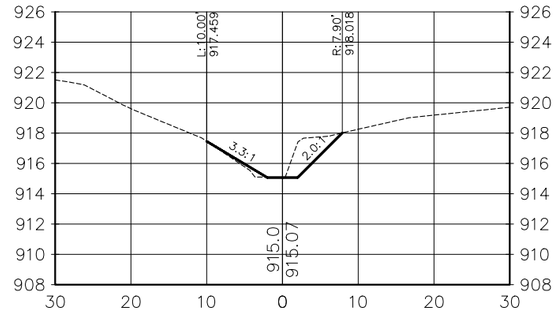

1+75.00

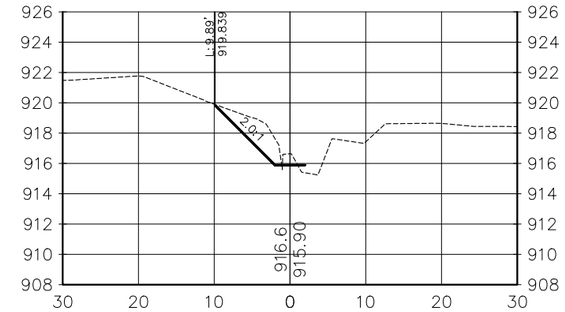

0+50.00

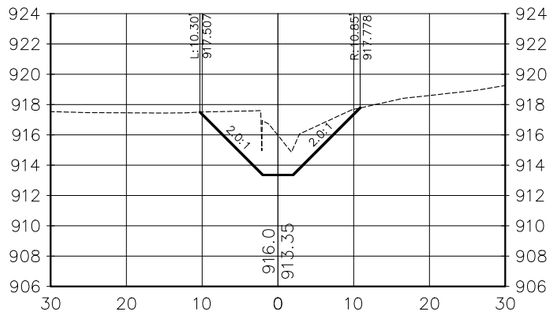

1+25.00

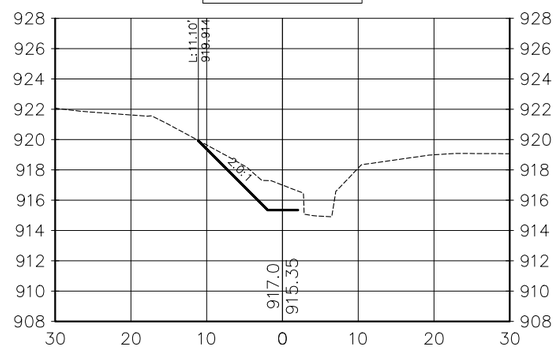

2+00.00

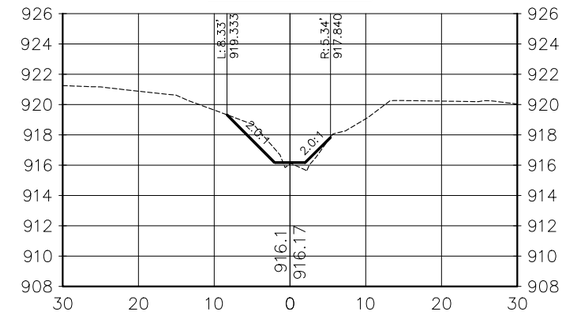

0+75.00

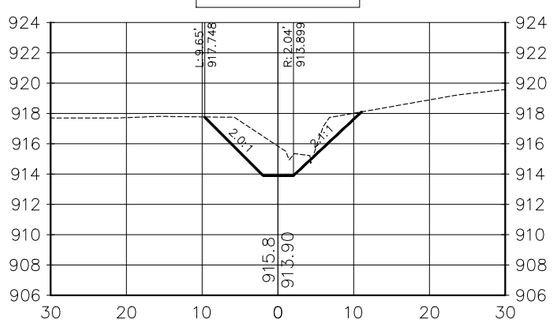

1+50.00

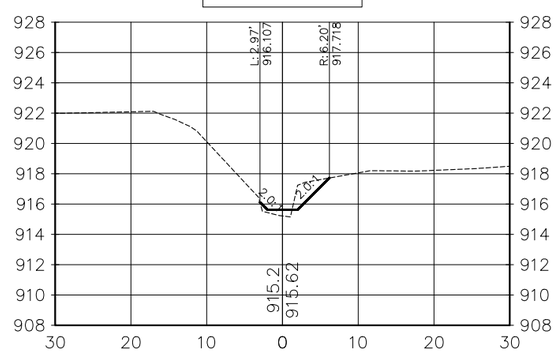

2+25.00

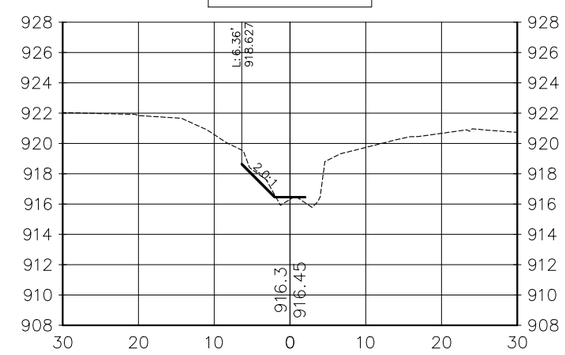

NO	DATE	BY	CKD	APPR	REVISION

I hereby certify that this plan, specification or report was prepared by me or under my direct supervision and that I am a duly Licensed Professional Engineer under the laws of the State of Minnesota.

Signature: MICHAEL J. PAYNE

Date: 3–13–18 License#: 50484

City of Plymouth

PLYMOUTH, MINNESOTA
KILMER PARK STREET
RECONSTRUCTION

CROSS SECTIONS

EAST DITCH

STATE AID PROJECT NO.	DRAWN BY	DATE
----	M. PAYNE	2–18
COUNTY PROJECT NO.	DESIGNED BY	
----	M. PAYNE	2–18
CITY PROJECT NO.	CHECKED BY	
ST189001.001	M. PAYNE	2–18
	REVIEWED BY	
	J. RENNEBERG	2–18

2+50.00

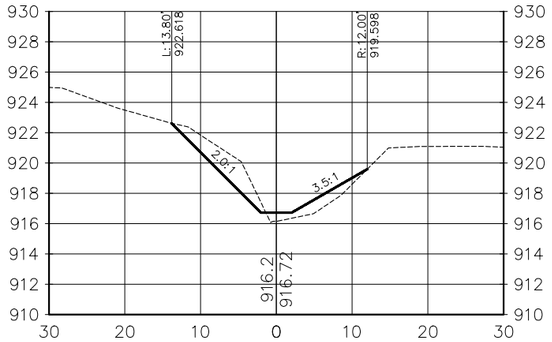

3+25.00

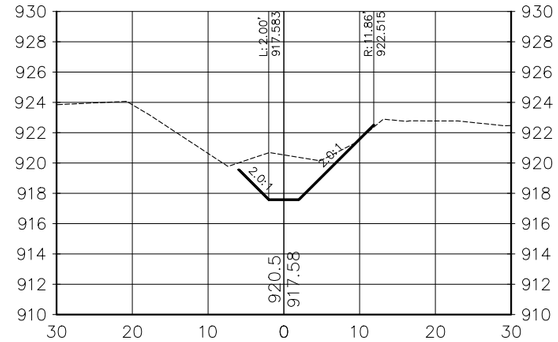

4+00.00

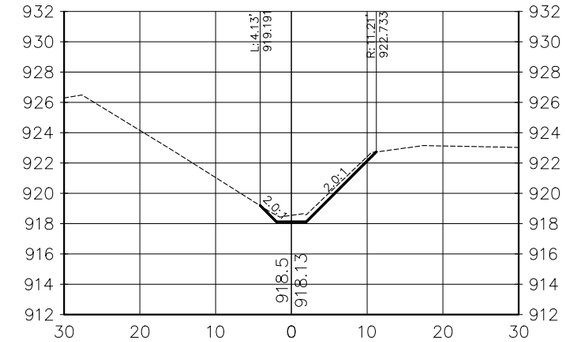

2+75.00

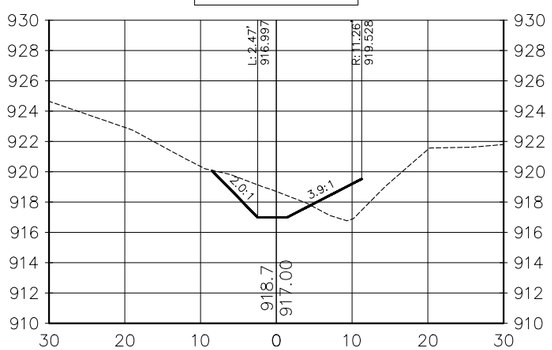

3+50.00

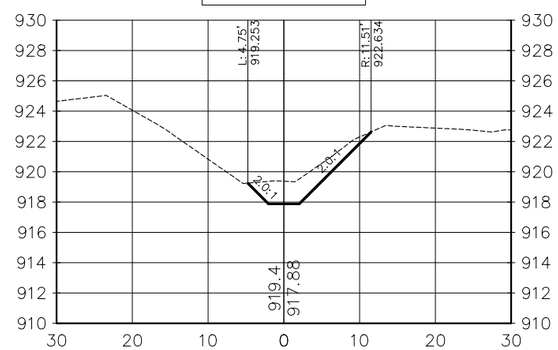

4+25.00

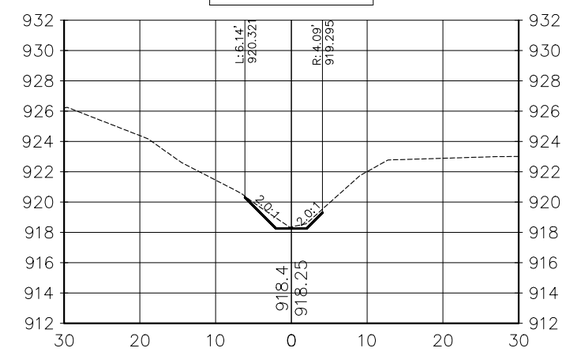

3+00.00

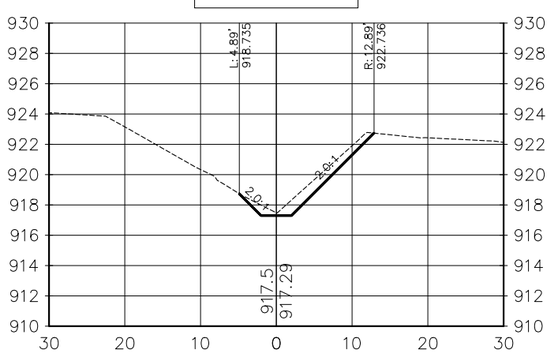

3+75.00

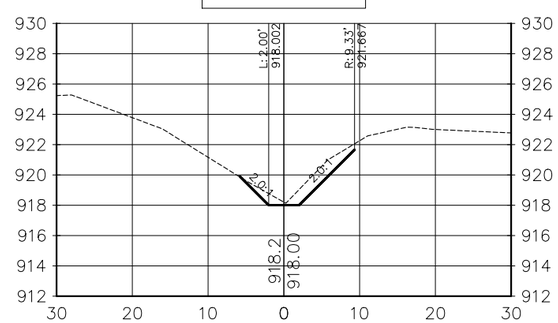

4+50.00

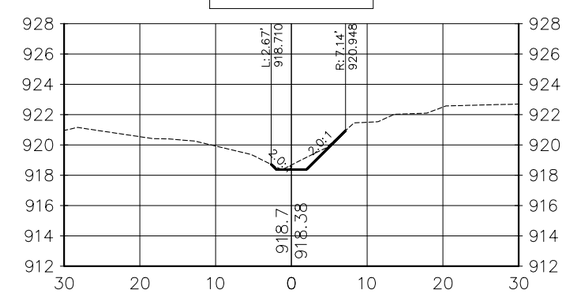

NO	DATE	BY	CKD	APPR	REVISION

I hereby certify that this plan, specification or report was prepared by me or under my direct supervision and that I am a duly Licensed Professional Engineer under the laws of the State of Minnesota.

Signature: MICHAEL J. PAYNE

Date: 3–13–18 License#: 50484

City of Plymouth

PLYMOUTH, MINNESOTA
KILMER PARK STREET RECONSTRUCTION

CROSS SECTIONS
EAST DITCH

STATE AID PROJECT NO.	DRAWN BY	DATE
– – – –	M. PAYNE	2–18
COUNTY PROJECT NO.	DESIGNED BY	
– – – –	M. PAYNE	2–18
CITY PROJECT NO.	CHECKED BY	
ST189001.001	M. PAYNE	2–18
	REVIEWED BY	
	J. RENNEBERG	2–18

4+75.00

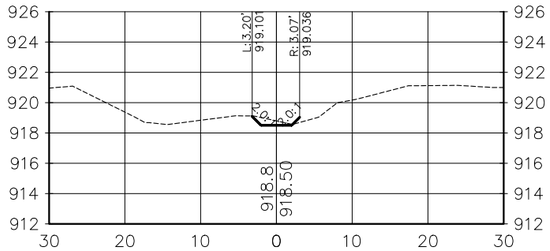

NO	DATE	BY	CKD	APPR	REVISION

I hereby certify that this plan, specification or report was prepared by me or under my direct supervision and that I am a duly Licensed Professional Engineer under the laws of the State of Minnesota.

Signature: MICHAEL J. PAYNE

Date: 3-13-18 License#: 50484

City of Plymouth

PLYMOUTH, MINNESOTA
KILMER PARK STREET
RECONSTRUCTION

CROSS SECTIONS

EAST DITCH

STATE AID PROJECT NO. ----	DRAWN BY M. PAYNE	DATE 2-18
COUNTY PROJECT NO. ----	DESIGNED BY M. PAYNE	2-18
CITY PROJECT NO. ST189001.001	CHECKED BY M. PAYNE	2-18
	REVIEWED BY J. RENNEBERG	2-18

SHEET 106 OF 106